EVO Max Series V2
Multi-rotor Drone

User Manual

Version 1.0.2 2025.05

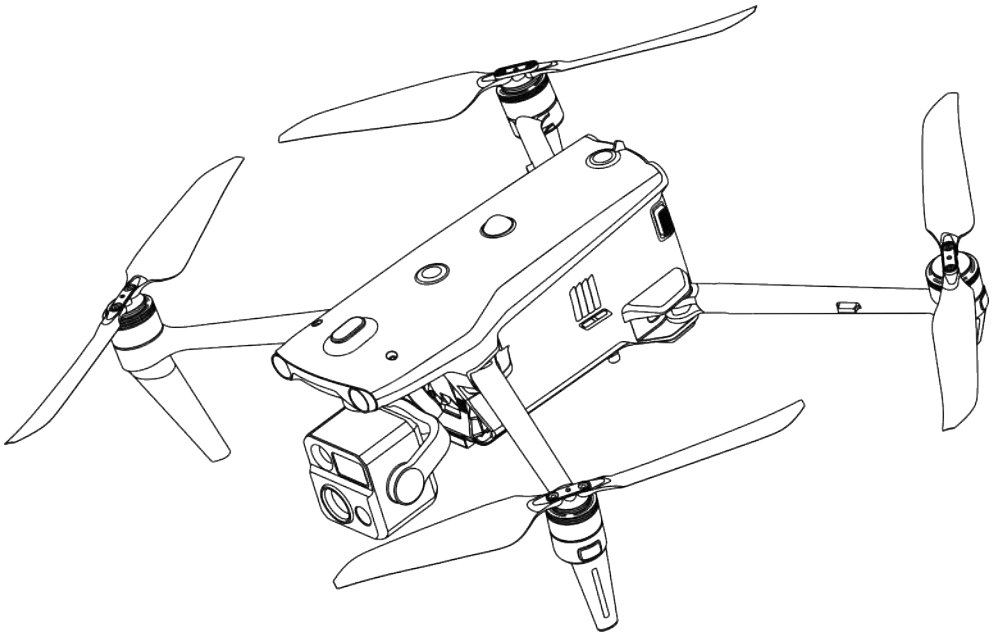

AUTEL ROBOTICS

EU Declaration of Conformity

The product complies with EU Declaration of Conformity. For details, please refer to EVO Max series V2 multi-rotor drone DoC.

Trademark Information

EVO Max™, Autel Enterprise™ and AUTEL® trademarks are registered trademarks of the Autel Robotics Co., Ltd. (hereinafter referred to as "Autel Robotics") in China or other countries/regions.

Copyright

This manual and other documentations mentioned in this manual is copyrighted by Autel Robotics Co., Ltd. with all rights reserved. Without prior written authorization from the company, no person (or entity) may copy, scan, store, distribute, reproduce, sell, transfer, or modify any part or all of this manual in any form for personal use or use by others. Users should only refer to this manual and the content thereof as instructions to operate this product. This manual should not be used for other purposes.

Reading Assistance

- This manual is an electronic PDF document that supports high-resolution printing. If you are using a PDF reader such as Adobe Reader to read this manual, press Ctrl + F on Windows or Command + F on Mac to search for keywords.
- View the content structure in the table of contents and click on titles to navigate to the respective pages.

Legend

The following symbols are used in this manual to draw the user's attention to important safety and operating information. Please be sure to follow the notes or requirements under each symbol, otherwise, it may affect the safety features of the product or cause personal injury.

Symbol	Definition
⚠	Warning: Alerts to a potentially hazardous situation.
!	Important: Reminds the user to pay attention to a point.
	Remarks: Supplementary information.
	Tips: Quick tips to get the best possible experience.

Thank you for purchasing and using the EVO Max series V2 multi-rotor drone from Autel Robotics. Relevant user documents for this product are provided in electronic form along with the product, and download links are provided in this manual. Before using this product, please carefully read the operation steps and precautions in this manual, so that you can quickly understand the characteristics and usage methods of this product, so as to ensure safe use of the product.

	● The final interpretation right of this document and all related documents of this product belongs to Autel Robotics. ● This document is subject to update without notice.

Term and Acronym

To facilitate reading, the following table displays terms and acronyms that may be used in the manual:

- Autel Robotics: Autel Robotics Co., Ltd.
- Drone: EVO Max series V2 multi-rotor drone, including EVO Max 4T V2, EVO Max 4N V2 and EVO Max 4NZ V2.
- Battery: ABX41-D Smart Battery.
- Remote Controller (or RC): Autel Smart Controller V3.
- Flight Application: Autel Enterprise Application (Installed on the Remote Controller).
- UAS: Unmanned Aircraft System.
- UAV: Unmanned Aerial Vehicle.
- C2: Command and Control.
- Remote Identification System:
  - In EU, it is referred to as Direct Remote Identification or DRI.
  - In other countries or regions except EU, it is referred to as Remote ID.
- UGZ: UAS Geographical Zones.
- IMU: Inertia Measurement Unit.

Read Before Your First Flight

To ensure safe use of the EVO Max series multi-rotor drone, Autel Robotics provides you with the following documents and relevant tutorial videos. Please scan the QR codes in this manual or use the provided links to access them.

1. “Packing List”: A list of everything that should be included in the packing box.
2. “Disclaimer and Safety Operation Guidelines”: Instructions on how to operate the product safely.
3. “Battery Safety Operation Guidelines”: Basic knowledge and safe handling of smart batteries.
4. “Quick Start Guide”: Basic knowledge of operating the product.
5. “User Manual”: A guide for you to master the operation method of the product proficiently.
6. “Maintenance Manual”: Instructions on how to maintain the drone and its accessories.

We recommend that you first check the completeness of the items in the packing box according to the “Packing List,” then read the “Disclaimer and Safety Operation Guidelines” carefully, and then watch the tutorial videos and read the "Quick Start Guide" to get a basic understanding of how to use the product.

Before your first flight, please read the "Battery Safety Operation Guidelines" and "User Manual" carefully to get a more detailed understanding of how to use the product.

	● For users in Chinese Mainland, please refer to simplified Chinese version. For users in other countries or regions, please refer to corresponding language versions of the manual. ● Due to nuance in different language versions, if you have questions on some content, please refer to the simplified Chinese version and English Version.

Tutorial videos, User Documents, and Relevant Software

You can scan the QR codes below or visit the following links to access tutorial videos and user documents or download relevant software for the EVO Max series multi-rotor drone:

- To watch tutorial videos, please visit:
https://www.autelrobotics.com/videos/evo-max-series/.

- To download resources, please visit:
https://manuals.autelrobotics.com/?dir=/EVO%20Max%20Series%20V2/Aircraft/.

Manual Guide

This manual contains 7 main chapters and 2 appendices. You can refer to the corresponding chapters for the desired information.

Chapter	Chapter Overview
Product Overview	This chapter introduces the main functions of the EVO Max series V2 multi-rotor drone.
Flight Safety	This chapter introduces the flight environment, wireless communication requirements, and important flight safety features of the drone.
Drone	This chapter introduces the functions and usage of various components of the EVO Max series multi-rotor drone.
Remote Controller	This chapter introduces the functions of the Autel Smart Controller V3, including how to use the controller to operate the drone.
Smart Battery	This chapter introduces how to use, store, and maintain the smart battery of the drone.
Flight Application	This chapter introduces the interfaces and functions of the flight application.
Firmware Updates & Maintenance	This chapter introduces how to perform firmware updates and routine maintenance for the drone.

Appendix A	This chapter provides technical specifications for the EVO Max series multi-rotor drone and its accessories.

Disclaimer

To ensure the safe and successful operation of this product, please read and fully understand all user documents listed above and strictly follow the operating instructions and steps described in this manual. Store the drone and its accessories out of the reach of children and pets. If you do not abide by the Safety Operation Guidelines, Autel Robotics shall not be responsible for any product damage or personal and property loss during use and shall not provide any free warranty service. Never modify the product using any incompatible component or in any way that does not conform to the official instructions of Autel Robotics. Otherwise Autel Robotics will not be responsible for any product damage or personal and property loss caused by such behaviors. Please make sure that the operations you perform do not endanger the personal or property safety of yourself or those around you. By starting to use this product, you agree that you have read, understood, and accepted all terms related to this product. You undertake to be responsible for your own actions and all consequences arising therefrom. You undertake to use this product only for legitimate purposes and agree to these terms and any relevant policies or guidelines that Autel Robotics may establish.

Important

- When unboxing the product for the first time, carefully check the drone and other accessories included in the packing box according to the “Packing List”.
- The content of this manual will be updated from time to time based on the function updates of the product. Please be aware that Autel Robotics will not be responsible for any product damage or personal and property loss caused by usage of outdated user documentation. Every time before product update, please ensure the user documentation is the latest version.
- Please be aware that in the absence of flight logs and/or logs from the flight application, Autel Robotics may not be able to analyze the causes of product damage or accidents and provide after-sales service.

Warning

- Using the drone involves certain safety risks. Do not allow minors to operate the drone.
- Do not use this product in places that children tend to stay.
- Before using this product, please obtain corresponding flight certificate according to the laws and regulations in the corresponding countries or regions in advance.
- Only users who have mastered the usage method can be allowed to conduct operations and daily maintenance on the drone and its relevant accessories.

End Use Statement

This product may be subject to export control laws in China, U.S, EU or other countries, which can only be authorized for civil (not military) use in sale, export or domestic transfer. Users need to confirm the product will not be used in the following situations, otherwise he or she will assume all losses caused by usage in such situations and legal responsibility on their own:

1. any military end use.
2. used for nuclear weapons, biological or chemical weapons or missiles that carry those weapons.
3. export or re-export or transfer it to any entity or person sanctioned by China, U.S, EU or any other government with jurisdiction.
4. export, re-export or transfer it to Cuba, Iran, North Korea, Syria, Crimea, Sevastopol and other areas under embargo.
5. any device or equipment that supports monitoring purposes.

Warranty Policy

Autel Robotics guarantees users who purchase products through its official authorized channels that:

- Under normal use, the Autel Robotics products you purchase will be free from material and workmanship defects during the warranty period.
- If you can provide a valid purchase receipt, the warranty period of this product is calculated from the midnight of the next day after you receive the product.
- If you cannot provide a valid purchase receipt, the warranty start date will be postponed by 90 days from the date of manufacture indicated by the product's serial number or as defined by Autel Robotics.

Tip

- For the after-sales policy of the product, please visit: https://www.autelrobotics.com/service/policy/.

After-Sales Support

If you have any questions or concerns about our products, please contact Autel Robotics customer support:
Hotline: (844) MY AUTEL or (844) 692-88 35

Maintenance Service

If your equipment needs to be inspected or repaired, please contact Autel Robotics through the following methods:

- Email after-sale@autelrobotics.com or support@autelrobotics.com.
- Call Autel Robotics customer support at (844) MY AUTEL or (844) 692-88 35.
- Contact dealers authorized by Autel Robotics.

Important

- All data stored on the product may be erased during the repair process. To avoid data loss, please back up important files in your drone or remote controller before the product is under warranty.

Update Log

The content of this manual will be updated irregularly. The update log is as follows:

Version	Date	Revisions
V1.0	2025.01	● Completed the first version of the user manual.
V1.0.1	2025.04	● Updated terms.
V1.0.2	2025.05	● Adjusted the description of the geofencing system and updated flight application to V1.9.1.x.

Compliance with FCC/ISED

Any Changes or modifications not expressly approved by the party responsible for compliance could void the user's authority to operate the equipment.
This device complies with part 15 of the FCC Rules. Operation is subject to the following two conditions: (1) This device may not cause harmful interference, and (2) this device must accept any interference received, including interference that may cause undesired operation.

Note: This equipment has been tested and found to comply with the limits for a Class B digital device, pursuant to part 15 of the FCC Rules. These limits are designed to provide reasonable protection against harmful interference in a residential installation. This equipment generates, uses and can radiate radio frequency energy and, if not installed and used in accordance with the instructions, may cause harmful interference to radio communications. However, there is no guarantee that interference will not occur in a particular installation. If this equipment does cause harmful interference to radio or television reception, which can be determined by turning the equipment off and on, the user is encouraged to try to correct the interference by one or more of the following measures:

- Reorient or relocate the receiving antenna.
- Increase the separation between the equipment and receiver.
- Connect the equipment into an outlet on a circuit different from that to which the receiver is connected.
- Consult the dealer or an experienced radio/TV technician for help.

This device complies with Innovation, Science, and Economic Development Canada licence-exempt RSS standard(s). Operation is subject to the following two conditions: (1) this device may not cause interference, and (2) this device must accept any interference, including interference that may cause undesired operation of the device.

Le présent appareil est conforme aux CNR d' Innovation, Sciences et Développement économique Canada applicables aux appareils radio exempts de licence. L'exploitation est autorisée aux deux conditions suivantes : (1) l'appareil nedoit pas produire de brouillage, et (2) l'utilisateur de l'appareil doit accepter tout brouillage radioélectrique subi, même si le brouillage est susceptible d'en compromettre le fonctionnement.

This equipment complies with FCC/ISED radiation exposure limits set forth for an uncontrolled environment. This equipment should be installed and operated with minimum distance 20cm between the radiator& your body.

This transmitter must not be co-located or operating in conjunction with any other antenna or transmitter.

L'appareil est conforme aux limites d'exposition aux rayonnements spécifiées par la FCC/ISED pour les environnements non contrôlés. La distance entre le radiateur et le corps doit être d'au moins 20 cm lors de l'installation et du fonctionnement de l'appareil.
Cet émetteur ne doit pas coexister ou fonctionner conjointement avec toute autre antenne ou émetteur.

Table of Contents

Chapter 1 Product Overview **1**

1.1 Introduction 1
1.2 What's In The Rugged Case 2
1.3 Product Acceptance Checklist 3
1.4 UAS Introduction 4

Chapter 2 Flight Safety **8**

2.1 Legal Use Notice 8
2.1.1 Chinese Mainland 8
2.1.2 The U.S. 9
2.1.3 Canada 9
2.1.4 The EU 9
2.1.5 Other Countries and Regions 10
2.2 Flight Operation Guidelines 10
2.3 Flight Environment Requirements 11
2.4 Wireless Communication Requirements 11
2.5 Declaration of Maximum Take-off Mass 12
2.6 Obstacle Avoidance System 13
2.6.1 Introduction to Visual Obstacle Avoidance Sensing System and Millimeter-Wave Radar Sensing System 13
2.6.2 Observation Range 14
2.6.3 Visual Positioning Function 16
2.6.4 Visual Obstacle Avoidance Function 16
2.6.5 Precautions for Using Obstacle Avoidance Systems 17
2.7 Auto-Return 17
2.7.1 Manual Auto-Return Activation 18
2.7.2 Low Battery Auto-Return Activation 18
2.7.3 Behavior-Based Auto-Return Activation 19
2.7.4 Auto-Return Mechanism 20
2.7.5 Auto-Return Obstacle Avoidance Process 20
2.8 Landing Protection Function 21
2.9 Rebuilding the C2 Link 21
2.10 Flight Restrictions and Unlocking Restricted Zones 22
2.10.1 Geofencing System 22
2.10.2 Restricted Zones 23
2.10.3 UGZ Import 25
2.10.4 Unlocking No-Fly Zones 26
2.11 Altitude and Distance Limits 26
2.12 Drone Calibration 27

2.12.1 Compass Calibration 27
2.12.2 IMU Calibration 29
2.12.3 Gimbal Calibration 31
2.13 Emergency Stop Propellers During Flight 32
2.14 Remote Identification 33
2.15 Standard Flight Operation Process 33
2.15.1 Pre-Flight Checklist 33
2.15.2 Basic Flight Process 34
2.15.3 List of Safeguard 35
2.15.4 Post-flight Inspection Checklist 35
2.16 Warning Information Reference Table 36

Chapter 3 Drone 42

3.1 Drone Activation 42
3.2 Drone Components 42
3.3 Propeller 46
3.3.1 Replacing Propellers 46
3.4 Fold/Unfold The Arms 48
3.5 Arm Light 48
3.6 Strobe 50
3.7 Auxiliary Bottom Light 50
3.8 Gimbal Camera 51
3.8.1 Camera Structure 52
3.8.2 Camera Operations 53
3.9 Drone Gimbal 54
3.9.1 Gimbal Mechanical Range 55
3.9.2 Gimbal Operations 56
3.9.3 Replacing the Gimbal 56
3.10 Flight Control System 58
3.10.1 Flight Status 59
3.10.2 Flight Modes 60
3.10.3 Intelligent Flight Function 60
3.10.4 Hot Swap Battery 61
3.11 Installing the microSD Card 61
3.12 Connecting to PC/MAC 62
3.13 Extension Port 63
3.14 Noise Description 64
3.15 Drone Communication Frequency Bands 65

Chapter 4 Remote Controller 69

4.1 Introduction 69

4.1.1 Remote Controller Components 69
4.1.2 Communication Frequency Bands 72
4.2 Installing the Remote Controller Lanyard 74
4.3 Installing/Storing Sticks 74
4.4 Turning the Remote Controller On/Off 75
4.5 Checking the Battery Level of the Remote Controller 76
4.6 Charging the Remote Controller 78
4.7 Adjusting the Antenna Position of the Remote Controller 79
4.8 Remote Controller System Interfaces 79
4.8.1 Remote Controller Main Interface 79
4.8.2 Pull-Down Shortcut Menu 82
4.9 Frequency Matching Between the Drone and the Remote Controller 83
4.10 Selecting Stick Mode 85
4.10.1 Stick Modes 85
4.10.2 Setting Stick Mode 87
4.10.3 Starting/Stopping the Drone Motor 89
4.11 Remote Controller Keys 89
4.11.1 Custom Keys C1 and C2 89
4.11.2 Take-off/Return-to-Home Button and Pause Button 90
4.12 Turning On/Off the Remote Controller Prompt Sound 92
4.13 Calibrating the Remote Controller 92
4.14 HDMI Screen Output 93

Chapter 5 Smart Battery 94

5.1 Battery Introduction 94
5.2 Smart Battery Functions 95
5.3 Smart Battery Usage 96
5.3.1 Installing/Removing the Smart Battery 97
5.3.2 Turning On/Off the Smart Battery 98
5.3.3 Checking Battery Level 98
5.3.4 Smart Battery Self-heating 99
5.3.5 Charging the Smart Battery 101
5.4 Storing and Transporting the Smart Battery 103
5.5 Maintaining and Handling the Smart Battery 103
5.5.1 Maintaining the Smart Battery 103
5.5.2 Standard Charging and Discharging Process 104
5.5.3 Smart Battery Replacement Standards 104
5.5.4 Recycling the Smart Battery 104

Chapter 6 Flight Application 105

6.1 Application Introduction 105

6.2 Main Interface 105
6.3 Status Notification Bar 108
6.4 Toolbar 110
6.5 “Settings” Interface 113
6.6 Attitude Ball 121
6.7 "Map" Interface 122
6.8 Camera Interfaces 124
6.8.1 Camera Function Access 124
6.8.2 Camera Switch and Operation 128
6.9 Flight Missions 130
6.9.1 Waypoint Mission 130
6.9.2 Polygon Mission 136
6.9.3 Pre-Flight Check 141
6.9.4 Resume Mission 142
6.9.5 Geofence 142
6.9.6 Other Functions 144
6.9.7 Mission Library 146
6.9.8 Personal Center 146

Chapter 7 Firmware Updates & Maintenance 147

7.1 UAS Components Updates 147
7.2 Drone Parts Maintenance 147
7.3 Troubleshooting Guide 149

Appendix A Product Specifications 153

A.1 Drone 153
A.2 Gimbal 157
A.2.1 Fusion 4T V2 157
A.2.2 Fusion 4N V2 160
A.2.3 Fusion 4NZ-L V2 163
A.3 Remote Controller 166
A.4 Smart Battery 169

Chapter 1 Product Overview

1.1 Introduction

The EVO Max series V2 multi-rotor drone is equipped with an industry-leading high-performance processing chip, has powerful autonomous flight and mesh network mission capabilities, is integrated with a visual obstacle avoidance sensing system and a millimeter-wave radar sensing system, and has an omnidirectional obstacle avoidance system. With an excellent power management system, the drone can reach a flight time of up to 42 minutes. Also, it utilizes a three-axis stabilized gimbal, allowing you to view observed videos and data from different lenses of the gimbal camera in real time through the flight application.

The EVO Max series multi-rotor drone adopts a foldable arm design and can hold its propellers for easy storage and transportation. The drone is equipped with a PSDK Port at its top, allowing you to add different industry-specific mounts on the drone to meet various operational needs.

At its top, the drone is equipped with a high-intensity strobe for indicating the drone's position in the air, while at its bottom, it has auxiliary lights to improve visual positioning performance in weak light conditions, thus enhancing flight safety during landing.

The remote controller (hereinafter referred to as "RC") adopts the Autel SkyLink 2.0 Video Transmission solution, has strong anti-interference capabilities. After matching with the drone, it can achieve stable transmission of HD videos to its display screen. The RC is equipped with multiple function buttons, enabling quick drone control and camera operation.

The remote controller features a 7.9-inch 2048×1536 high-brightness touchscreen with a maximum brightness of 2000 nits. It adopts a customized Android system that supports the installation of third-party apps and offers functions such as satellite-based positioning, Wi-Fi, Bluetooth, and HDMI output. Moreover, it supports the PD60 fast charging protocol, allowing it to operate up to 4.0 hours on a full charge.

Tips

- The visual obstacle avoidance sensing system and millimeter-wave radar sensing system are limited in usage environments and regions. Please read the "Disclaimer and Safety Operation Guidelines" to learn about relevant safety precautions.
- The flight time of the drone is measured in a laboratory environment (the drone flies at a constant speed of 8 m/s in a light breeze environment) and is for reference only. The actual flight time may vary depending on factors such as environmental conditions and flight mode.
- The 4.0-hour operating time of the remote controller is measured with the screen brightness set to 50% and is for reference only. The operating time may vary in different scenarios.

Warning

- If multiple drones are flying in an area at the same time, please keep an appropriate air distance to avoid any accidents.

1.2 What's In The Rugged Case

The drone is packed and transported in a rugged case (with built-in shock absorption protective materials) and the items inside the case are as follows:

Important

- Upon receiving the product, please inspect the rugged case in its integrity and confirm that its outer packaging is intact, with no signs of unpacking. Meanwhile, save the unboxing video for potential logistics damage claims.
- After daily use, please put the drone and other items in the case and store the case in a dry and cool environment. When moving, please do not drop or bump the case.

Tips

- The smart battery is shipped in a separate packaging. After receiving the battery, please store it in the rugged case.

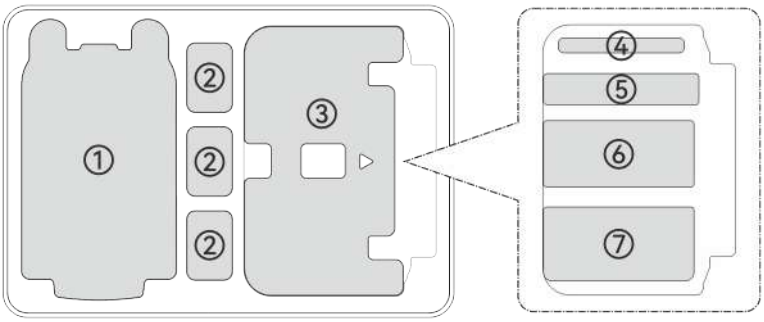

Fig 1-1 What's in the Rugged Case

Table 1-1 Items inside the Case

No.	Item	Note
1	Drone	Includes a gimbal, a gimbal cover, propellers, and 64GB microSD card. When storing it, please fold the arms and hold the propellers.
2	Smart Battery	Comes with 1 battery and provides 3 battery storage slots.
3	Remote Controller	Comes with 1 RC, includes smart controller cover.
4	Document Box	Includes "Quick Start Guide" and a camera lens cleaning cloth. To obtain user documents, users can also scan the corresponding QR code.
5	Reserved Storage Slot	/

6	Battery Charger	Includes a charger and an AC power cable.
7	Accessory Area	Includes a remote controller charger, a USB-C to USB-C data cable, a USB-C to USB-A data cable, a remote controller lanyard, spare propellers (1158CW×1 and 1158CCW×1), and spare sticks (×2).

1.3 Product Acceptance Checklist

After unboxing the product, please check whether the actual items match the items described in the following packing list and carefully inspect the appearance of the drone and all accessories. If anything missing or damage is found, please contact Autel Robotics After-Sales Support or authorized dealers promptly.

Table 1-2 Packing List

No.	Item	Model/Specification	Quantity	Note
1	Drone	MDX-1	1	Includes 4 propellers, 1 gimbal (as per the purchased model), a gimbal cover and 64GB microSD card.
2	Gimbal	Fusion 4T V2	1	EVO Max 4T V2's gimbal.
		Fusion 4N V2	1	EVO Max 4N V2's gimbal.
		Fusion 4NZ-L V2	1	EVO Max 4NZ V2's gimbal.
3	Gimbal Cover		1	
4	Smart Battery	ABX41-D	1	
5	Remote Controller	EF9-3	1	Autel Smart Controller V3 comes with 2 sticks and 2 antennas.
6	Battery Charger	MDX120W	1	
7	AC Power Cable		1	Used with the battery charger.
8	Remote Controller Charger	GaN-001	1	
9	USB-C to USB-C Data Cable		1	Used with the remote controller charger.
10	USB-C to USB-A Data Cable		1	

11	Spare Propeller	1158	1	One 1158CW propeller and one 1158CCW propeller.
12	Spare Stick		2	
13	Remote Controller Lanyard		1	
14	Smart Controller Cover		1	
15	"Quick Start Guide"		1	Placed in the document box.
16	Lens Cleaning Cloth		1	Placed in the document box.
17	Product Certification		1	

1.4 UAS Introduction

Before the first flight, please perform a comprehensive inspection of the UAS to ensure that all components meet the following requirements. A complete UAS consists of two parts: the drone and the remote controller. The relevant requirements and explanations are as follows:

■ Drone Components & Payload

Please note that a complete drone includes the drone body, gimbal, propellers, and the battery. Any damage or missing of these components may result in a malfunction.

The RTK module is an optional accessory for enhancing drone positioning accuracy. Users can contact Autel Robotics to purchase the RTK module based on their needs.

Table 1-3 Drone Component List

Item	Product Info	Manufacturer	Note
EVO Max 4T V2 Drone	Max. weight: 1665 g Max. Dimension: 563×657×147 mm **US:** EAN: 6924991133513 UPC: 889520213516 **EU:** EAN: 6924991136309 UPC: 889520216302	Autel Robotics	Includes propellers, ABX41-D smart battery, and a Fusion 4T V2 gimbal. The firmware version of the drone is V1.9.1.125 or higher.
EVO Max 4N V2 Drone	Max. weight: 1700 g Max. Dimension: 563×657×147 mm	Autel Robotics	Includes propellers, ABX41-D smart battery, and a Fusion

	US: EAN: 6924991139683 UPC: 889520219686 **EU:** EAN: 6924991139720 UPC: 889520219723		4N V2 gimbal. The firmware version of the drone is V1.9.1.125 or later.
EVO Max 4NZ V2 Drone	Max. weight: 1715 g Max. Dimension: 563×657×147 mm **US:** EAN: 6924991135609 UPC: 889520215602 **EU:** EAN: 6924991136330 UPC: 889520216333	Autel Robotics	Includes propellers, ABX41-D smart battery, and a Fusion 4NZ-L V2 gimbal. The firmware version of the drone is V1.9.1.125 or later.
ABX41-D Smart Battery	Max. weight: 530 g Max. Dimension: 158.4×74.3×50.7 mm EAN: 6924991136408 UPC: 889520216401 Type: Lithium-ion Polymer Rechargeable Battery Capacity: 9248mAh Number of batteries needed for the drone: 1. Number of backup batteries: Optional, up to users' requirement	Autel Robotics	Included or Retail Sale. The firmware version is V0.4.33.1 or later.
1158 CW/CCW Propeller	Max. weight: 10.3 g Max. Dimension: 11 inches EAN: 6924991133506 UPC: 889520213509 Number: 4 Number of blades in a propel: 2. Type: Nylon + carbon fiber rotor blade	Autel Robotics	Included or Retail Sale.
XRT-2301X RTK Module	Max. weight: 29 g Max. Dimension: 72×48×45 mm EAN: 6924991127222 UPC: 889520207225	Autel Robotics	Optional. Not supported in the EU.

Tips

- For details about how to install a RTK module, see "3.13 Extension Port" in Chapter 3.
- All the above components have passed Autel Robotics safety and compatibility tests. Users can purchase and use accordingly.
- In case of adding any third-party payload before flight, please reasonably evaluate the mounting weight and the gravity center of the drone after mounting. For more details, see "2.5 Declaration of Maximum Take-off Mass" In Chapter 2.

■ Remote Controller Components & The App

A complete remote controller includes the controller body (with properly functioning display, touchscreen, and button), joysticks, and antennas. Any damage or missing of these components may result in a malfunction of RC's corresponding feature. The built-in flight application, which serve as the only human-machine interface to control the drone, should be maintained to ensure comprehensive control over the UAS.

Table 1-4 Remote Controller Components List

Item	Product Info	Operating System	Manufacturer	Note
EF9-3	Max. weight: 1195 g (smart controller cover excluded) Max. Dimension: 269×302×87 mm **US:** EAN: 6924991130819 UPC: 889520210812 **EU:** EAN: 6924991128878 UPC: 889520208871	Android 11	Autel Robotics	Includes 2 command sticks and 2 antennas.

Table 1-5 Firmware and Application version explanation

No.	Item	Release Version	Note	Release Date
1	Video Transmission	V1.9.1.117	/	25Q2
2	Remote Controller	V6.0.5.0	/	25Q2
3	Android System	V1.9.1.117	Based on Android 11	25Q2
4	Autel Enterprise	V2.4.54	Flight Application	25Q2

Tips

- The above information is for reference only. Both the remote controller and the drone have been upgraded to the latest versions before shipment. Users can use accordingly.

- When the remote controller and the drone are matched in frequency and the remote controller is connected to the internet, the flight application will automatically check for firmware updates. For more instructions, see "7.1 UAS Components Updates" in the Chapter 7.
- When there's any prompt for new version upgrade, please follow the instructions to update in time to address any issues and to enjoy the new features. Users also have the option to temporarily pause updates, which won't affect the existing functions.

Table 1-6 List of Pre-installed Apps on the Remote Controller

NO.	Pre-installed App	Version	Note
1	Autel Enterprise	V2.4.54	Flight Application
2	Files	11	System Basic Application
3	Gallery	1.1.40030	System Basic Application
4	Chrome	68.0.3440.70	System Basic Application
5	Settings	11	/
6	Maxitools	2.45	/

Tip

- Users can based on their own needs or preference, replace those system basic applications with third-party applications.

Chapter 2 Flight Safety

When unboxing the product for the first time, please scan the QR code provided in the "Quick Start Guide" to access the latest electronic version of this manual, and then carefully read and understand the contents of this manual, so as to ensure safe and proper use of the drone.
Before operating any actual flight, be sure to first carry out relevant basic flight training (such as watching tutorial videos and receiving guidance from a professional) and be familiar with the functions and characteristics of the drone and the remote controller.
Before the flight, please understand all the local laws and regulations regarding civil unmanned aerial vehicles (UAVs) in advance, and according to the local flight requirements and restrictions, select an appropriate flight environment and set a reasonable flight altitude for legal flights. There may be legal risks when using a drone in an unsuitable flight environment.
Before the flight, be sure to read the "Disclaimer and Safety Operation Guidelines" to understand all safety precautions.

Remark

- For users in other regions except mainland, China, please refer to corresponding language version of this manual.

2.1 Legal Use Notice

When unboxing the product for the first time, please comply with your local regulations in accordance with the laws and regulations of the following countries and regions to complete the real-name registration of the drone.

2.1.1 Chinese Mainland

- According to the “Regulations on Real-name Registration of Civil Unmanned Aerial Vehicles” issued by the Civil Aviation Administration of China (CAAC), upon purchasing a civil drone, the owner must register the drone on the “Civil UAV Comprehensive Management Platform” (https://uom.caac.gov.cn) in real name and paste the QR code registration mark on the drone. Those who fail to implement real-name registration and paste registration marks will be punished by the regulatory authorities in accordance with relevant regulations.
- The drone is a light unmanned aircraft. Autel Robotics prohibits youth under the age of 18 from operating this drone.
- We recommend that you read the “Interim Regulations on the Management of Unmanned Aircraft Flights” before flying to learn more about the regulations.
- Before flight, users should obtain lifting approval document of corresponding airspace (if it is a restricted flight zone) from local aviation authority in advance and report flight activities.

Important

- According to the regulations outlined in the "Civil Unmanned Aerial Vehicle System Safety Requirements" in Chinese mainland, after the user completes the UOM real-name

registration, the drone will automatically report the flight dynamic data to the UOM platform through the remote controller each time it is turned on. When the report is successful, "Broadcasting" will be displayed in the "Remote ID" column. For more details, see "2.14 Remote Identification" in this Chapter.

2.1.2 The U.S.

- Before using a drone, the owner of the drone must register the drone on the FAA website (https://faadronezone-access.faa.gov/#/) in real name (Registrants must be 13 years of age or older). Failure to register an unmanned aircraft that is required to be registered may result in regulatory and criminal penalties.
- The Federal Aviation Administration (FAA) may assess civil penalties up to $27,500. Criminal penalties include fines of up to $250,000 and/or imprisonment for up to three years.

2.1.3 Canada

- Drone pilots must be 14 or older and always carry a valid drone pilot certificate while operating their drone. A valid drone pilot certificate is a printed or electronic document issued by Transport Canada. No other form of certification will be accepted. For details about how to get a drone pilot certificate in Canada, refer to the following link: https://tc.canada.ca/en/aviation/drone-safety/drone-pilot-licensing/getting-drone-pilot-certificate
- Before flight, please register your drone through the following portal: https://tc.canada.ca/en/aviation/drone-safety/drone-management-portal
- This product belongs to the multi-rotor drone type. You can only fly them in following operating environments:
  - In controlled airspace. For details about the controlled airspace, please refer to relevant Canadian law: https://tc.canada.ca/en/aviation/drone-safety/learn-rules-you-fly-your-drone/choosing-right-drone
  - Near people. For details about flying a drone near people, please refer to relevant law: https://tc.canada.ca/en/aviation/drone-safety/learn-rules-you-fly-your-drone/choosing-right-drone
- Violation of relevant laws and regulations may incur penalty of up to 3000 dollars (for person) or 15000 dollars (for company) or jail time.

⚠ Warning

- Please do not fly over people, which may cause physical damage to people around.

2.1.4 The EU

- Drone operators/owners must register with the National Aviation Authority (NAA) of the Member State in which they reside. (https://www.easa.europa.eu/drones/NAA).
- This product is not a toy and should not be used by children under the age of 16.
- In the EU, the product is a drone classified as C2. When using the drone, you must comply with the following operational limitations in subcategory A2 in an urban environment:

  - Must not overfly uninvolved people.
  - Maintain a horizontal distance of 30 meters from uninvolved people (can be reduced to 5 meters if the low-speed function is activated).
  - Maintain flight altitude below 120 meters above ground level.
- This product can also fly in subcategory A3.
- Remote pilot should obtain a 'Remote pilot certificate of competency' for A2 'open' subcategory by:
  - Having a 'Proof of completion for online training' for A1/A3 'open' subcategory.
  - Conducting and declare a practical self- training.
  - Passing an additional theoretical exam at the NAA or proctored online.
- Before using this product, click the following link to learn the detailed information on safety operation limitations about **EASA Class 2 drones with low speed mode**. (https://www.easa.europa.eu/document-library/general-publications/drones-information-notices).

Important

- According to the relevant laws and regulations in the EU, the drone is equipped with sensors (gimbal cameras) that can detect personal data. Users are required to register in compliance with the laws and regulations when using the drone.
- After registration, please enter Remote ID in the flight application before flight. For more information, see "2.14 Remote Identification" in this chapter.

2.1.5 Other Countries and Regions

Before flight, consult local legal professionals or aviation authorities to learn about local laws, regulations, and policies regarding civil UAVs and follow relevant guidelines for legal registration.

2.2 Flight Operation Guidelines

Before flight, be sure to understand and adhere to the following flight operation guidelines to avoid serious consequences and legal violations:

- Do not operate the drone while under the influence of alcohol, drugs, medication, dizziness, fatigue, or nausea, or in any other poor physical or mental conditions.
- Do not fly near manned aircraft, and make sure that the drone does not interfere with large manned aircraft in the same flight path when flying. Keep vigilant at all times and avoid other aircraft. Land immediately if necessary.
- Do not fly in areas prohibited by local regulations without authorization. The prohibited areas may include airports, borders, major cities, densely populated areas, large event sites, emergencies (e.g., forest fires), and sensitive building facilities (e.g., nuclear power plants, power stations, transformer stations, prisons, traffic arteries, government buildings, and military facilities).
- Do not use the drone at large event sites, including but not limited to sports arenas and concerts.
- Do not fly in airspace above the altitude limit specified in regulations.
- Do not use the drone to carry any illegal or hazardous goods.

- Be aware of the flight activity category (e.g., recreational, official, or commercial). Before flying, be sure to obtain the necessary permits from relevant authorities. If necessary, consult local legal professionals for a detailed explanation of flight activity categories.
- When using the drone for filming or photography, respect the privacy rights of others. Do not use the drone for unauthorized surveillance activities, including but not limited to monitoring individuals, groups, events, performances, exhibitions, or buildings.
- Note that using cameras to film or photograph individuals, groups, events, performances, exhibitions, or buildings without authorization may infringe upon copyrights, privacy rights, or other legal rights of others. Therefore, it is essential to familiarize yourself with and comply with local laws and regulations before using the drone.

2.3 Flight Environment Requirements

- Do not fly in severe weather conditions such as strong winds, snow, rain, heavy fog, dust storms, extreme cold, or extreme heat. The maximum wind speed resistance is 12 m/s.
- Make sure that the drone takes off from and lands on open, unblocked, and flat ground, away from crowds, nearby buildings, trees, etc., and within a visual line of sight for flight safety, so as to ensure flight safety.
- Due to insufficient lighting conditions, no GNSS signal, and narrow space, some functions of the drone may be limited. Always pay attention to the surrounding environment of the drone and maintain control of the drone at all times.
- When flying at night, turn on the strobe and make sure that the Aux Light is enabled during landing for flight safety.
- Do not take off from or land on moving surfaces such as moving vehicles or boats.
- Do not take off from or land on sandy surfaces to prevent sand particles from affecting the motor service life.
- The performance of the drone is subject to ambient temperature and air density. Please use the drone within the temperature range of -20℃ to +50℃ (without load) or -20℃ to +40℃ (full load) and fly the drone in regions at an altitude below 4500 meters.
- When using the drone in post-disaster scenarios such as fires, explosions, lightning, storms, tornadoes, heavy rain, floods, earthquakes, and dust storms, pay special attention to the safety of take-off and landing points and changes in the surrounding environment and prioritize personal safety.
- Keep the drone away from steel structures, iron ore mines, etc., to avoid interfering with the compass of the drone.

2.4 Wireless Communication Requirements

- Keep the drone at least 200 meters away from areas with strong electromagnetic interference, such as radar stations, microwave stations, and mobile communication base stations.
- Keep the drone at least 2000 meters away from drone interference equipment. Otherwise, the drone interference equipment and the drone cannot work at the same time.
- When flying near sources of electromagnetic interference, exercise caution and continuously observe and assess the stability of remote controller signals and Video Transmission screen. Common sources of electromagnetic interference include but are not limited to high-voltage power lines, high-voltage substations, mobile communication base stations, and television broadcasting signal towers. If the drone encounters significant signal interference when flying

near these locations, it may not be able to work normally. In this case, please return to the home point for landing as soon as possible.

- Fly in open, unblocked areas or highlands. Tall mountains, rocks, urban buildings, and forests may block the GNSS signal and remote controller signals.
- It is recommended to turn off unnecessary Wi-Fi and Bluetooth devices in the vicinity to avoid interference with the signals of the remote controller.

2.5 Declaration of Maximum Take-off Mass

During flight operations, make sure that the actual take-off mass of the drone does not exceed the maximum take-off mass (MTOM) declared for the drone. Exceeding this limit can lead to safety accidents. For detailed data, see Appendix A "A.1 Drone".
The actual take-off mass of the drone consists of the drone's mass and the mount mass. Before adding any mount, make sure that the mount mass is within a reasonable range.

Remarks

- The drone's mass comprises the mass of fuselage, gimbal, propellers, and smart battery. Different models of gimbal may differ in mass. If you change the gimbal with one of different models, re-weigh the drone to determine its mass.
- Mounts consist of functional module mounts and physical mounts. When adding mounts to the drone, always re-weigh the actual take-off mass of the drone.
- The mount mass should satisfy: Maximum Mount Mass≤MTOM-Drone's Mass.

■ Gravity Center Limitation

When users are mounting payload to the drone before flight, the payload should be installed in limited position in order to not affect the obstacle avoidance sensing function and flight stability of the drone. In other words, payload should be installed within the gravity center range, and the payload installed should not cover the lens group of visual obstacle avoidance at the bottom of the drone and downward millimeter-wave radar. The suggested mounted location is as follows:

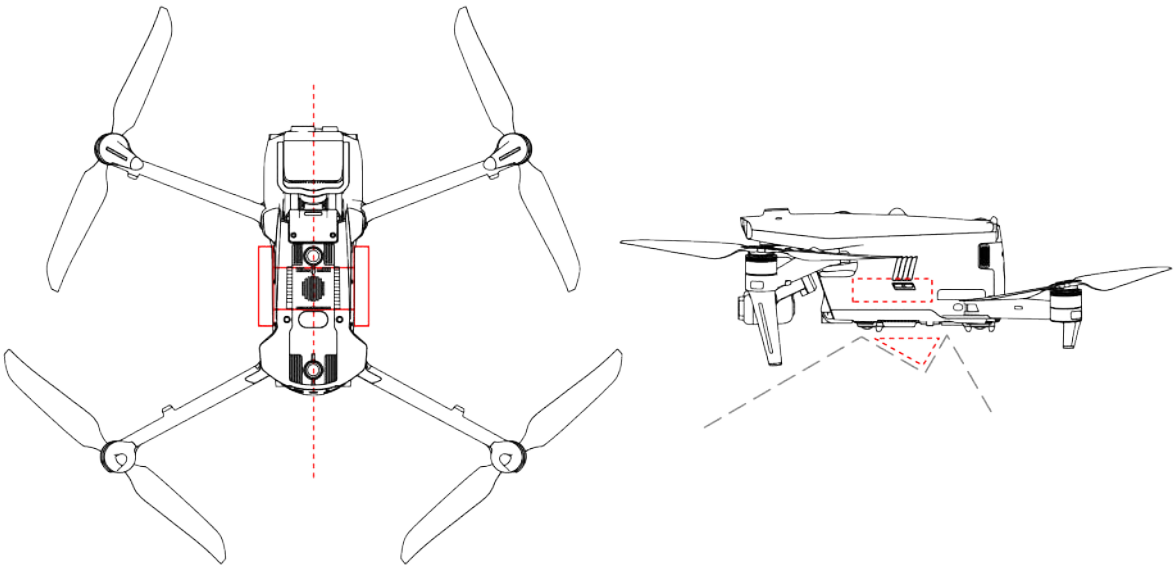

Fig 2-1 Mount gravity center and non-interference zone (circled by red line)

Remarks

- When installing a function module to the drone, please choose a function module that has passed Autel Robotics safety and compatibility test as this kind of product has already passed flight safety test.
- When users are mounting payload, please ensure that the mounting point should be located at the center line of the drone and should not be beyond the area bracketed in the left picture in fig 2-1. Meanwhile, the size of the mounted payload, as circled in the right picture in fig 2-2, should not be too big to go beyond the non-interference zone.
- When users are mounting payload at the side of the drone, it is recommended that the payload mounted on the one side should weight no more than 100 g as the payload of more than 100 g (and less than 200 g) mounted may affect the braking performance of the drone to some degree,

2.6 Obstacle Avoidance System

2.6.1 Introduction to Visual Obstacle Avoidance Sensing System and Millimeter-Wave Radar Sensing System

The drone adopts a dual-sensing system design of "Visual Obstacle Avoidance Sensing System + Millimeter-Wave Radar Sensing System". The integration of these two systems provides excellent omnidirectional obstacle avoidance performance and ensures precise positioning and safe flight of the drone.

The visual obstacle avoidance sensing system is an image positioning system that uses visual image ranging to sense obstacles and obtain drone position information. The visual obstacle avoidance sensing system of the drone is located on the front, rear, top, and bottom of the fuselage. The front and rear parts use a "dual pinhole lens" structure, while the top and bottom parts use a "dual fisheye lens" structure, the combination of which enables omnidirectional visual obstacle avoidance.

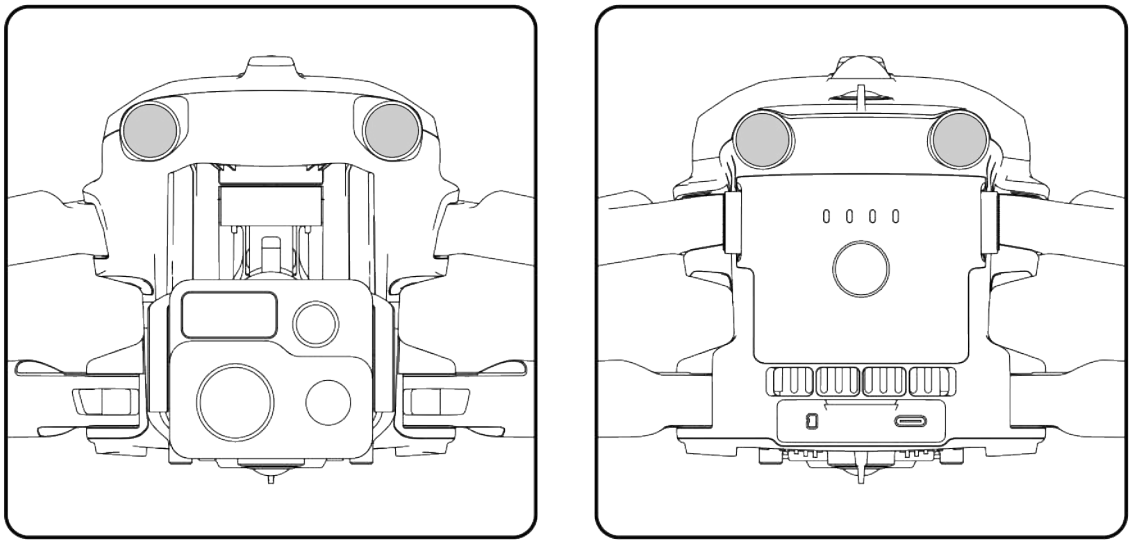

Fig 2-2 Front and rear visual obstacle avoidance lens modules of the drone

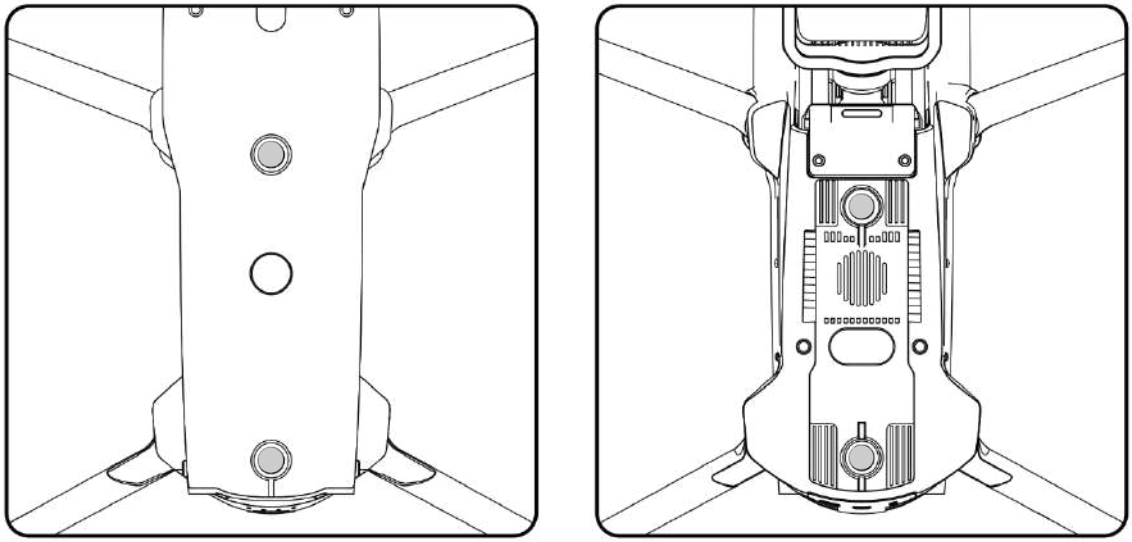

Fig 2-3 Top and bottom visual obstacle avoidance lens modules of the drone

⚠ Warning

- Do not block the lenses of the visual obstacle avoidance lens during flight, as it will affect the visual obstacle avoidance performance of the drone, potentially leading to flight accidents.

The millimeter-wave radar sensing system senses the distances and positions of obstacles by emitting electromagnetic waves. According to the regulations of different countries and regions, the millimeter-wave radar sensing system of the drone can either integrate six 60G millimeter-wave radars inside the fuselage in six directions (front, rear, sidewards, top, and bottom) or integrate a 24G millimeter-wave radar under the fuselage for sensing.

Remarks

- For detailed frequency bands and Effective Isotropic Radiated Power (EIRP) data of the millimeter-wave radar, see Appendix A "A.1 Drone".
- Please note that products for Chinese mainland only support downward 24G millimeter-wave radar, products for EU only support 60G millimeter-wave radar.
- Please note that the frequency band of the millimeter-wave radar is a hardware parameter, which cannot be adjusted through software. Autel Robotics ensures that the millimeter-wave radar frequency band of the EVO Max series drones complies with local legal regulations.

2.6.2 Observation Range

■ Observation Range of Visual Obstacle Avoidance Sensing System

The visual obstacle avoidance sensing system uses a fusion of upper and lower fisheye lenses + front and rear pinhole lenses to achieve 720° omnidirectional observation of the drone's entire body.

Important

- The visual obstacle avoidance performance of the drone's visual obstacle avoidance sensing system is not 100% reliable, as the system may be affected by ambient lighting and object surface texture. When the visual obstacle avoidance system is enabled during flight, always pay attention to the Video Transmission screen and alarm information in the flight application.

■ Observation Range of Millimeter-wave Radar Sensing System

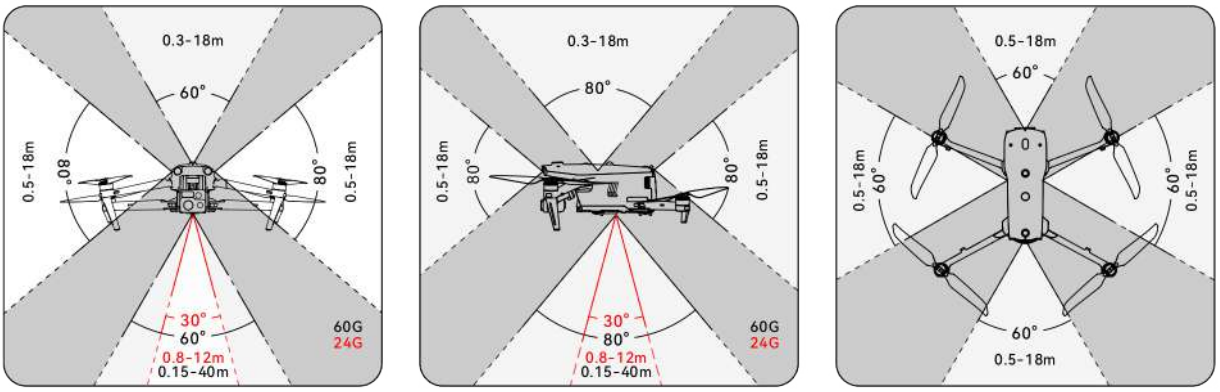

Fig 2-4 Observation Range of Millimeter-Wave Radars

Remark

- Please be aware that millimeter-wave radars of different frequency bands may have varying observation performance. For detailed data, please refer to "A1 Drone".

Warning

- The obstacle avoidance distance of the millimeter-wave radar sensing system varies with the obstacle's ability to reflect electromagnetic waves and its surface size.
- The gray area represents the blind spot of a millimeter-wave radar, where the radar cannot detect obstacles.

■ Observation Range of Radar and Visual Obstacle Avoidance Sensing Systems

With the integration of radar and visual obstacle avoidance sensing systems, the drone achieves 720° omnidirectional obstacle avoidance and supports nighttime obstacle avoidance.

Remarks

- If the drone uses 60G millimeter-wave radars, it supports nighttime obstacle avoidance by millimeter-wave radars.
- If the drone uses a downward 24G millimeter-wave radar, it does not support nighttime obstacle avoidance and only supports visual obstacle avoidance in good lighting conditions. Additionally, it uses the bottom millimeter-wave radar only for assisted landing.

2.6.3 Visual Positioning Function

The drone supports the visual positioning function. When the visual positioning is enabled, the drone will keep hovering when GNSS signal is poor, so as to ensure flight safety.

⚠ Warning

- If you do not have extensive flight experience, do not fly the drone beyond your sight distance.
- When the drone is in visual positioning mode, please make sure that the drone flies in a well-lit environment and over object surfaces with clear texture and does not fly in mirror reflection areas such as water or snow.
- Before a drone takes off, if the visual positioning of the drone is turned off, do not turn on the visual positioning function after the drone takes off as it might lead to visual positioning failure. If you need to turn on the visual positioning function again, it is recommended to land the drone before conducting relevant operations.

Tips

- When GNSS signal is strong, the drone will enter GNSS mode in which the visual positioning function is only used for assisting positioning and improving the drone's positioning accuracy.
- When there is no GNSS signal and visual positioning fails at the same time, the drone will enter the attitude mode automatically.
- In the event of GNSS signal loss or weakening during flight, the remote controller will display the following warning prompts:
  - If the takeoff point is inaccurate: The flight application will display a warning "GNSS signal is weak. The landing point may deviate." with a corresponding verbal warning.
  - If GNSS signal is weak: The flight application will display a warning " GNSS signal is weak. Move the aircraft to an open area." with a corresponding verbal warning.
  - If GNSS is being spoofed: The flight application will display a warning "GNSS Spoofing" with a corresponding verbal warning.

2.6.4 Visual Obstacle Avoidance Function

The drone supports visual obstacle avoidance function. When there is sufficient light, the drone will detect obstacles within the flight range and brake or bypass within the set safety distance.

Remarks

- After the obstacle avoidance behavior is set, the obstacle avoidance function of the drone still may fail if there are obstacles that are too spare in the flight route, such as sparse fine wire meshes or small branches at the outer edges of trees. To ensure flight safety, please choose an open and spacious airspace for flight.
- Due to inertial, to ensure the drone brakes or bypasses within the set safety distance, the flight control system will limit the flight power performance of the drone and its attitude

angle will be no more than 30° and its maximum flight speed will be less than 15 meter per second.

⚠ Warning

- The obstacle avoidance function of the drone cannot be enabled when Ludicrous mode is set for the drone.

2.6.5 Precautions for Using Obstacle Avoidance Systems

The measurement accuracy of the visual obstacle avoidance sensing system is easily affected by factors such as light intensity and object surface texture. Exercise caution when using the visual obstacle avoidance sensing system in the following scenarios:

- Flying over pure-colored surfaces (e.g., pure white, pure black, pure red, and pure green) and low-texture surfaces.
- Flying over surfaces with strong reflections.
- Flying over moving objects (e.g., crowds, swaying reeds, bushes, and grasses).
- Flying over water surfaces or transparent object surfaces.
- Flying in environments with rapid and intense changes in lighting or direct exposure to strong light sources.
- Flying over extremely dim (with light intensity of less than 15 lux) or extremely bright object surfaces.
- Flying over small obstacles (e.g., iron wires, electric wires, and tree branches).
- Lenses contamination (e.g., water droplets and fingerprints).
- Flying in low-visibility conditions (e.g., heavy fog, heavy snow, and sandstorm).
- Flying at an altitude below 2 meters with a very fast flight speed.

The millimeter-wave radar sensing system operates as an auxiliary enhancement system for visual obstacle avoidance and can work continuously throughout the day.

Remarks

- Please note that when flying in low-light conditions (such as at night), there is a strong possibility that the drone's visual obstacle avoidance sensing system may fail, leading to loss of visual obstacle avoidance function of the drone.
- If you need to fly in low-light conditions (such as at night), please confirm that the drone uses 60G millimeter-wave radars. Additionally, please operate cautiously in nighttime flights, as in the nighttime obstacle avoidance is not 100% functional. It is recommended to fly in open areas.

2.7 Auto-Return

The drone is equipped with an auto-return function. When the GNSS signal is good, once the auto-return condition is triggered, the drone automatically returns to the home point and lands to avoid possible accidents.

The drone provides three methods of activating the auto-return function: manual auto-return activation, low battery auto-return activation, and behavior-based auto-return activation.

Remarks

- Home point: the landing point of the drone during an auto-return flight. In the flight application, you can set the home point of the drone as "Aircraft" or "RC". For more information, see "6.5 "Settings" Interface" in Chapter 6.
- If no home point is set in the flight application, the take-off point is used as the home point.
- During an auto-return, the control function of the remote controller for the drone is disabled. In this case, users can quickly press the pause button "⏸" on the remote controller or press and hold it for 2 seconds to pause or exit the auto-return function or pull the pitch stick down to exit the auto-return. After exiting the auto-return, the RC will regain control of the drone. For more information, see "4.11.2 Take-off/Return-to-Home Button and Pause Button" in Chapter 4.

Warning

- When the drone is in visual positioning mode or attitude mode, the auto-return function cannot be activated.
- If the obstacle avoidance behavior is set as "Turn off", during an auto-return flight, the drone will not be able to automatically avoid obstacles.
- If the home point of an auto-return flight is not suitable for the drone to land (such as uneven grounds and crowds), please exit the auto-return function first, and then manually assume control to land the drone.

2.7.1 Manual Auto-Return Activation

During the flight, users can press and hold the return-to-home button "⌂" on the remote controller for 2 seconds until the RC emits a "beep" to manually activate the auto-return function.

2.7.2 Low Battery Auto-Return Activation

During the flight, to prevent unnecessary risks caused by insufficient power of the smart battery, the drone will automatically check, based on the drone's current position, whether the current battery level is sufficient for returning to home point.
If the current battery level is only enough to complete the return journey, the flight application will prompt a warning "The remaining battery is only enough for Return to Home. The aircraft will Return to Home in 10s." to prompt users to decide to execute low battery auto-return. If you choose to execute it or don't take any action within 10 seconds, the drone will initiate low battery auto-return after 10 seconds.
If you cancel the execution and continue flying with a low battery level, when the battery level decreases to critically low battery warning threshold, the drone will activate a critically low battery landing.

Tips

- Please note that besides the above intelligent low battery auto return, when the drone battery level decreases to the low battery warning threshold set in the flight application,

the drone will also be triggered to return. The drone flight control system executes auto return no matter which one of those two scenarios occur.

- When critically low battery landing is triggered, in the process of landing, users can push and pull the remote controller sticks to adjust the landing location of the drone. After users stop using the sticks, the drone will continue to land.

⚠ Warning

- When the low battery auto-return is triggered in the drone, it is recommended that the auto-return process should not be canceled. Otherwise, the drone may be unable to return to the home point due to insufficient power.
- It is recommended that the drone should not enter the critically low battery landing process. Once the critically low battery landing process is initiated, if the landing point does not meet safe landing standards, the drone may have no sufficient battery to land in safe place, which may lead to drone damage.
- When the flight application displays a warning alert, it should be processed according to the corresponding references immediately.

2.7.3 Behavior-Based Auto-Return Activation

During a flight mission, if "Finish Action" is set to "Auto RTH", the drone will activate auto-return after completing the mission; if "Signal Loss Action" is set to "Auto RTH", when the flight application displays a warning saying “Aircraft disconnected.”, the drone will activate auto-return. For more information, see “6.9 Flight Missions” in Chapter 6.
During a manual flight, if "Signal Loss Action " is set to "Auto RTH", when the flight application displays a warning saying “Aircraft disconnected.”, the drone will activate auto-return. For more information, see “6.5 “Settings” Interface” in Chapter 6.

Tips

- In the flight application, the signal lost action is set to “Return to Home” by default.
- During a flight mission, after the drone is disconnected from the remote controller, the drone will continue to fly in the original state. It will not perform the "Signal Loss Action" until the flight application displays a warning saying “Aircraft disconnected.”. During a manual flight, after the drone is disconnected from the remote controller, the drone will slow down and hover. It will not perform "Signal Loss Action" until the flight application displays a warning saying “Aircraft disconnected.”.
- During the lost action auto-return process, even if the drone resumes connection with the remote controller, the drone will continue to execute auto-return.

2.7.4 Auto-Return Mechanism

Table 2-1 Auto-Return Mechanism

Drone distance when the return mechanism is triggered	Return-to-Home Mechanism
Distance from the home point ≤ 10 meters	The drone returns to the home point at the current altitude.
10 meters＜Distance from the home point ≤ 25 meters	If the current flight altitude is lower than 20 meters, the drone ascends to the altitude of 20 meters and returns to the home point. If the current flight altitude is higher than 20 meters, the drone returns to the home point at the current altitude.
25 meters < Distance from the home point ≤ 50 meters	If the current flight altitude is lower than 30 meters, the drone ascends to the altitude of 30 meters and returns to the home point. If the current flight altitude is higher than 30 meters, the drone returns to the home point at the current altitude.
Distance from the home point > 50 meters	If the flight altitude is lower than the set RTH altitude, the drone ascends to the RTH altitude. If the flight altitude is higher than the set RTH altitude, the drone returns to the home point at the current altitude.

Remark

- Drone distance refers to the horizontal distance from the current drone to the home point.

2.7.5 Auto-Return Obstacle Avoidance Process

When the obstacle avoidance system is enabled (the obstacle avoidance behavior is not set as “Turn off”) and the light/altitude conditions meet working requirement of the visual obstacle avoidance sensing system, the drone will achieve obstacle avoidance during the return process. The specific situation is as follows:

- During flight missions, the obstacle avoidance behavior is set as “Emergency stop” or "Bypass". In the case of a lost action auto-return, low battery auto-return, or auto-return after mission completion, when an obstacle is detected in front of the drone, the drone will automatically brake within the set safety distance and autonomously choose a random direction from the left, right, or upward directions to bypass the obstacle.

Important

- During the obstacle avoidance process, if the drone's ascent altitude reaches the maximum altitude limit and obstacle avoidance is not yet achieved, the drone will hover in place until a critically low battery landing is triggered. In this case, please manually take control of the drone in advance.

2.8 Landing Protection Function

When the landing protection function is enabled, the drone will assess whether the ground conditions are suitable for landing before landing. For more information, see "6.5 "Settings" Interface" in Chapter 6.
During the auto-return process, when the drone reaches above the home point and the landing protection function is enabled, the drone will execute the following strategies:

1. If the landing protection function detects that the ground is suitable for landing, the drone will land directly.
2. If the landing protection function detects that the ground is not suitable for landing (e.g., uneven ground or water below), the drone will keep hovering, send a prompt in the flight application, and wait for the user to take action. In this case, the drone will start descending only when a critically low battery landing is triggered, and the user cannot cancel this process.
3. If the drone cannot detect the ground situation, the landing protection function will not be available and the drone will be forced to land directly.

Remarks

- When the landing protection function is not available, user should manually take over the drone in advance and choose an appropriate landing point for landing.

2.9 Rebuilding the C2 Link

To ensure the safety and controllability of flight behaviors, the drone will stay in reconnection status and constantly attempt to reestablish a connection with the ground control station (remote controller) after losing the C2 link. In practice, this process is divided into the following stages:

- When the drone is disconnected from the remote controller, if the connection can be restored within 10 seconds, the remote controller will automatically regain control of the drone.
- If the link is not restored within 10 seconds, the flight application will display a warning saying "Aircraft disconnected.", and the drone will automatically execute relevant flight control actions according to the set lost action.
- During the execution of a lost action, the drone will continue its attempts to restore the C2 link. When the drone successfully restores the C2 link with the remote controller, the remote controller still cannot control the flight of the drone. To make the remote controller regain control of the drone, you must press and hold the pause button "⏸" on the remote controller for 2 seconds or pull the pitch stick to exit the lost action.

Tips

- During the flight, as long as the drone and the remote controller can communicate normally, the C2 link will remain active.
- If there are decoding errors that persist for a certain duration, leading to communication failure, the C2 link will be disconnected, and the drone will enter the reconnection status.
- The lost actions of the drone include RTH, hovering, and land.
- After the drone loses connection with C2 link, the flight application will display an alert "Aircraft disconnected." with a corresponding verbal alert.

2.10 Flight Restrictions and Unlocking Restricted Zones

Important

- Before flying, always carefully plan out the airspace in which you intend to fly in accordance with local laws and regulations. Do not operate the drone in the restricted airspace without permission.

2.10.1 Geofencing System

Autel Robotics has created a geofencing system for the safe and legal flight of its drone products, which can update real-time information on flight airspace restrictions around the world after the remote controller is connected to the Internet. In different types of restricted zones, the flight functions of aircrafts will be restricted to different degrees. The geofencing system supports the function of unlocking no-fly zones. If you need to perform flight missions in specific controlled airspace, after obtaining an airspace authorization approval from the local aviation authorities, you can contact Autel Robotics to unlock your aircraft within the validity period of the authorization.

The geofencing system does not completely align with the local laws and regulations. Before each flight, you should consult and understand the local laws, regulations, and regulatory requirements to ensure flight safety.

The flight control system of the drone is pre-configured with the geofencing system. Before each flight, make sure that the remote controller can connect to the Internet to automatically update airspace restriction information and synchronously upload it to the drone. During the flight, relevant airspace restriction information will be synchronously displayed in the flight application to ensure the safe and legal flight of the drone.

Tips

- The strategy to unlock legal no-fly zones in geofencing system varies according to the legal and regulatory requirements around the globe, and this section is provided for reference only.
- Due to information lag, the airspace restriction information provided by the geofencing system may not always be completely consistent with the latest local laws and regulations. All information is subject to the local laws and regulations.

- For temporary airspace restrictions, Autel Robotics can obtain the relevant regulatory announcements in a timely manner and synchronously upload the relevant airspace restriction information to the geofencing system. When you take flight actions in relevant zones, be sure to synchronize and update flight airspace restriction information.

⚠ Warning

- Please note that when GNSS signal is lost or becomes weak, the flight application will synchronously display a warning "GNSS signal is weak, and geo-awareness may be disabled.", and the drone will enter visual positioning mode or attitude mode. At this time, the geofencing system may not function, and relevant flight restriction functions will not take effect normally.

2.10.2 Restricted Zones

A Restricted Zone refers to an area within the electronic fence system where various flight functions are dynamically restricted. According to the differences in restrictions, it is divided into No-Fly Zones, Authorization Zones, Warning Zones, and Custom Geofences.
After powering on the remote controller and connecting to the Internet, you can query the distribution of Restricted Zones on the map page of the flight application.

Table 2-2 Flight Restrictions of Restricted Zones

Restricted Zones	Flight Restriction Description
No-Fly Zones	It is divided into legal No-Fly Zones and custom No-Fly Zones, which are displayed as red areas on the map page of the flight application. Drones cannot take off or fly within these areas, nor can they fly into these areas from the outside.
Authorization Zones	After obtaining the airspace authorization document from the local aviation authority and applying for unlocking the legal No-Fly Zone to Autel Robotics, the relevant No-Fly Zone will be converted into an Authorization Zone, which is displayed as a blue area on the map page of the flight application. Authorized drones can fly within the Authorization Zone as required.
Warning Zones	It is displayed as a yellow area on the map page of the flight application. When a drone flies in this area, it will receive an alarm prompt.
Custom geofences	It is displayed as a green area on the map page of the flight application. Drones can only fly within this area and are not allowed to fly out of it.

Tips

- After completing the editing of the custom geofence in the flight application, the saved custom No-Fly Zones or Custom Geofences can be viewed or edited in "Mission".

Remarks

- Before any flight, users must fully understand the local regulations regarding altitude restrictions for unmanned aerial vehicles (UAVs) and set them in the flight application.
- It is important to note that it is not suggested to fly cross regions with different legal altitude restrictions. The altitude limit setting is only effective for the takeoff area, the limit may not comply with regulations in neighboring regions. Users should adjust the corresponding altitude limits when flying across different regions.

A drone in flight has a specific initial velocity. To prevent the drone from accidentally entering no - fly zones (before unlocking), warning zones, or flying out of authorization zones and custom geofences, the Geofencing System sets up buffer zones outside the boundaries of no - fly zones and warning zones, as well as inside the boundaries of authorization zones and custom geofences.

Table 2-3 Buffer Zone Details

Buffer Zone Type	Buffer Zone Details
Buffer zones of legal no-fly zones	When the drone approaches a No-Fly Zone from the outside: ➢ Upon reaching the buffer zone boundary, the flight application will trigger a "The aircraft is close to the no-fly zone." alert. Simultaneously, the drone will automatically begin decelerating and eventually halt and hover within the buffer zone. When the drone is on the ground within the buffer zone: ➢ The drone is permitted to take off/land vertically or fly horizontally in a direction away from the No-Fly Zone.
Buffer zones of custom no-fly zones	When the drone approaches a No-Fly Zone from the outside: ➢ Upon reaching the buffer zone boundary, the flight application will trigger a "The aircraft is close to the no-fly zone." alert. Simultaneously, the drone will automatically begin decelerating and eventually halt and hover within the buffer zone. When the drone is on the ground within the buffer zone: ➢ The drone is not allowed to take off.
Buffer zones of authorization zones	When an authorized drone flies outward from an Authorization Zone: ➢ Upon reaching the buffer zone boundary, the flight application will display a " The aircraft is close to the no-fly zone." alert. Meanwhile, the drone will automatically decelerate and finally halt to hover within the buffer zone.

	When the drone is on the ground within the buffer zone: ➢ The drone is allowed to take off/land vertically or fly horizontally in a direction away from the No-Fly Zone.
Buffer zones of warning zones	When a drone approaches a Warning Zone from the outside: Upon reaching the buffer zone boundary, the flight application will issue a " The aircraft is close to the warning zone." alert. During this process, the drone's flight is not restricted, but cautious operation is required.
Buffer zones of custom geofences	When a drone flies outward from within a Geofence: ➢ Upon reaching the buffer zone boundary, the flight application will display an alert: " The aircraft is near the edge of the geofence. Leave immediately.". Concurrently, the drone will automatically decelerate and eventually halt to hover within the buffer zone. When the drone is on the ground within the buffer zone: ➢ The drone is not allowed to take off.

Remarks

- The buffer zone outside the legal No-Fly Zone, within the Authorization Zone, and outside the Warning Zone has a horizontal distance of 200 meters and a vertical distance of 50 meters.
- When there is no GNSS signal, if a drone accidentally enters a no-fly zone while the drone is still locked from the zone, the drone will automatically land upon regaining the GNSS signal. During the landing process, the throttle stick will not work, but the user can control the horizontal movement of the drone.
- When a drone is hovering in the buffer zone of a no-fly zone, the user can control the drone to exit the buffer zone along the normal direction of the boundary.
- When a Custom Geofence is activated, if the drone is on the ground outside the geofence, takeoff will be prohibited; if the drone is flying outside the geofence, it will prompt to return to home or land as soon as possible.

For flights in an authorization zone, if a drone is in the authorized airspace within validity period specified in the permit, the drone can fly normally in the zone. Once the drone flies beyond the authorized airspace or reaches the validity period, the drone will comply with the airspace restrictions of the current area.

2.10.3 UGZ Import

The drone supports importing the UGZ (UAS Geographical Zones) file, users can get the no-fly zone data files of their own country or region, and upload the data to the drone's flight control system. When the drone approaches relevant airspace during flight, it will execute corresponding responses to ensure flight safety (including warnings and slowdown and other actions).

Tips

- The UGZ import supports JSON format. Users can import no-fly zone data files published by local aviation authorities.
- Operation path: Copy the JSON file into the root path of the remote controller. On the map interface of the flight application, tap "" > "Import Geofence" on the right side. Follow the on-screen instructions to complete the operations.

2.10.4 Unlocking No-Fly Zones

To apply for unlocking a specific airspace within a no-fly zone, prepare the following information in advance according to your flight plan:

- Identity and contact information of the applicant.
- Unlock permit: a scanned copy or image of the valid permit for the flight application issued by local authorities (local public security bureau, aviation management department, or any other relevant organization/agency).
- Unlocked zone: a cylindrical area. It includes the following information:
  - Name of the unlocked zone.
  - Coordinates of the center point of the flight airspace plane (latitude and longitude, with 6 decimal places).
  - Radius of the flight airspace plane (in meters, with 2 decimal places).
  - Flight altitude (in meters, with 2 decimal places).
- Unlock date: Enter the unlock date according to the valid permit. The date is recommended to be accurate to day/hour/second.
- Drone S/N (Serial number): Multiple serial numbers can be applied at once.
- Autel account of UAS operator: Multiple accounts can be applied at once.

Log in to the official website of Autel Robotics at www.autelrobotics.com/service/noflight/, enter the relevant information, and complete the waiver application.

After the unlocking application is approved, you will obtain an unlock permit. The permit contains the drone serial number, UAS operator account, and unlocked zone (including the validity period).

Tip

- After the waiver application is submitted, it will be approved within 24 hours, and unlocking will be completed within 48 hours. Please make a reasonable flight plan in advance.

2.11 Altitude and Distance Limits

The altitude limit is the maximum flight altitude (relative to takeoff point) of the aircraft, while the distance limit is the maximum radius (with home point as the center) that the aircraft can fly. You can set altitude and distance limits in the flight application to ensure the safe flight of the drone. For more information, see “6.5 “Settings” Interface” in Chapter 6.

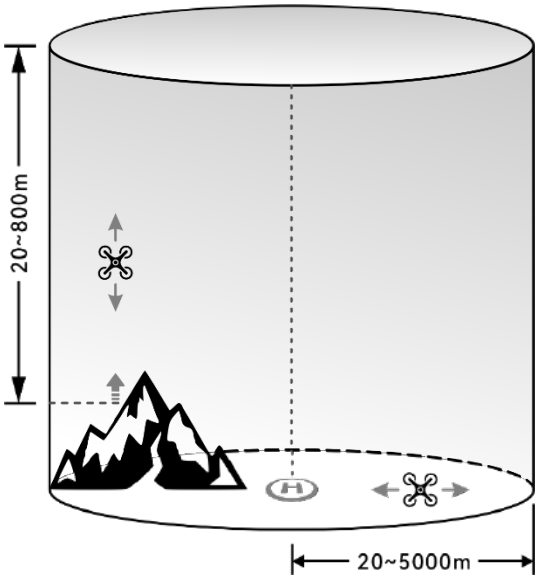

Fig 2-5 Diagram of altitude and distance limits

Tips

- In the flight application, the altitude limit should be set between 20 meters and 800 meters, and the distance limit should be set between 20 meters and 5000 meters. During actual flights, the maximum altitude limit should be set no greater than the maximum altitude specified by local laws and regulations. For example, in Chinese mainland, and the European Union, the maximum flight altitude of Civilian UAVs is no more than 120 meters, and in US, it is no more than 400 feet.
- When setting the maximum altitude limit, consider whether the RTH altitude set is reasonable or not, which should not exceed the maximum altitude limit.
- The RTH altitude should be set higher than the altitude of the tallest obstacle in the flight area.

2.12 Drone Calibration

2.12.1 Compass Calibration

The compass (magnetometer) has been calibrated at the factory. In this case users do not have to calibrate it.
If the flight application displays a warning alert “Compass needs calibration, please calibrate before flight.”, please follow the steps below to calibrate it.

Important

- The compass is very easy to be affected by electromagnetic interference. Electromagnetic interference may lead to compass errors and degradation in flight quality.
- Please choose an open outdoor area for calibration.
- During calibration, please stay away from areas with a strong magnetic field or large metal objects, such as magnetic ore mines, parking lots, construction areas with underground

reinforcing steel bars, underground areas, or locations near overhead power transmission lines.

- During calibration, do not carry ferromagnetic materials or metal objects on your person, such as mobile phones and watches.
- During the calibration process, please stay away from charged objects and ensure the drone fly 1.5 meters above the ground.
- During the calibration process, please do not turn off the power of the drone or start the motors.

Table 2-4 Compass Calibration

Step	Operation	Diagram
1	After turning on the drone and the remote controller, tap "⊞" > "⚙" > "🧭" > "Compass Calibration" > "Start Calibration" in the main interface of the flight application. Follow the instructions on the interface for calibration.	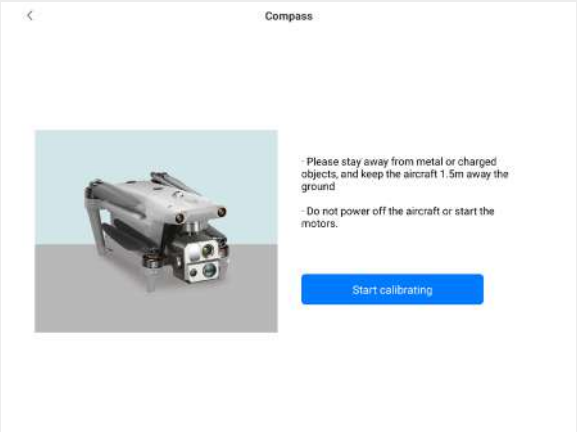
2	Hold the drone to keep it in a horizontal direction. Rotate the drone 360° horizontally until the interface prompts next step.	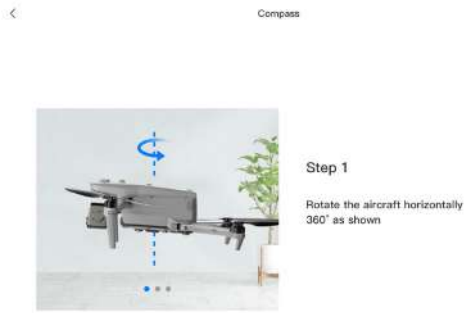

3	Hold the drone to keep it in a vertical direction with the nose up. Rotate the drone 360° horizontally until the interface prompts next step.	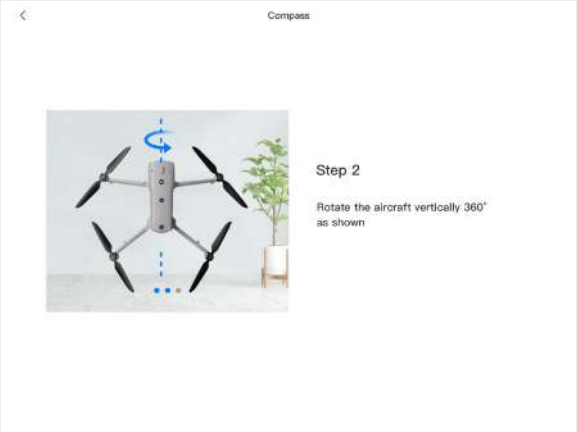
4	Hold the drone to keep it with the nose to the left and the side down. Rotate the drone 360° horizontally until the interface prompts successful calibration.	

Tips

- Please perform the calibration steps according to the tips shown in the compass calibration interface of the flight application.
- If the calibration fails, the rear arm lights of the drone will turn solid red, and the above steps should be repeated at this time.
- If the compass still cannot work properly after the calibration, fly the drone to other places and calibrate the compass again.

2.12.2 IMU Calibration

The IMU (Inertial Measurement Unit) of the drone has been calibrated at the factory, and no user calibration is required under normal conditions.
If the flight application displays warning alerts such as "Cannot take off due to IMU error. Calibrate IMU first." or "Please calibrate IMU", please follow the steps below to calibrate it.

Important

- Please place the drone according to the tips shown in the IMU calibration interface of the flight application, and keep the drone in a static state.
- Please place the drone on a flat ground, and do not move, shut down, or restart the drone during the calibration process.

- During IMU calibration, the gimbal will not work.

Table 2-5 IMU Calibration

Step	Operation	Diagram
1	After turning on the drone and the remote controller, tap "⊞" > "⚙" > "⊕" > "IMU Calibration" > "Start Calibration" in the main interface of the flight application. Follow the instructions on the interface for calibration.	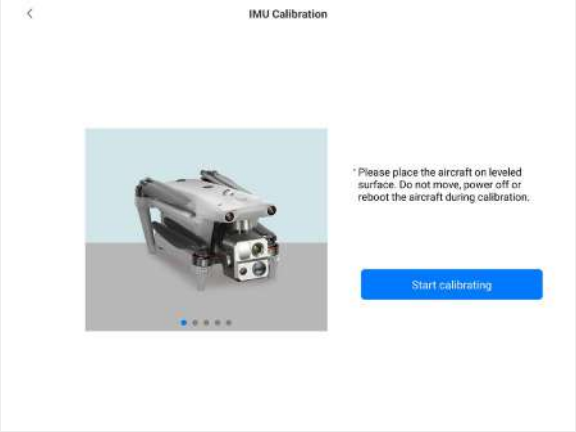
2	Fold up the arms and place the drone flat on the ground until the interface prompts next step.	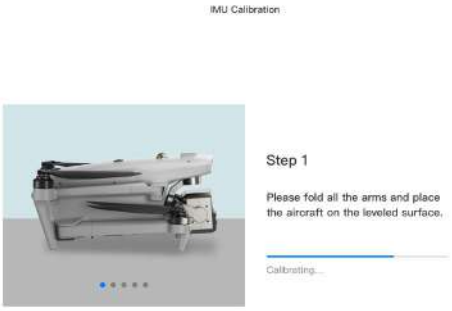
3	Turn the drone over 180° and lay the drone facing up until the interface prompts next step. Please pay attention to protecting the upward visual obstacle avoidance camera and strobe.	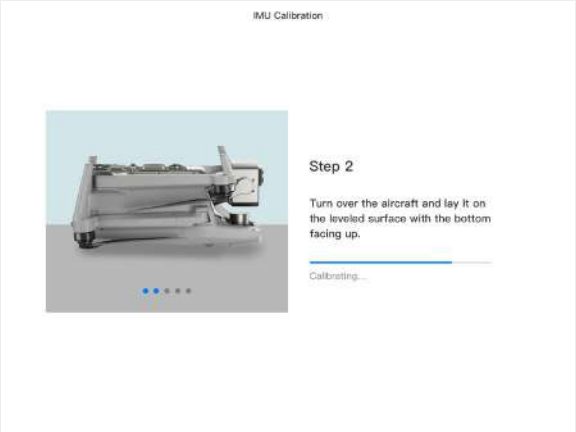

4	Put the left side of the drone flat on the ground until the interface prompts next step.	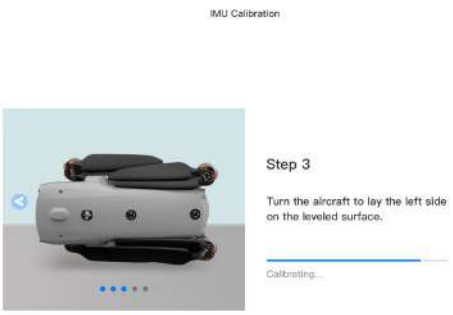
5	Put the right side of the drone flat on the ground until the interface prompts next step.	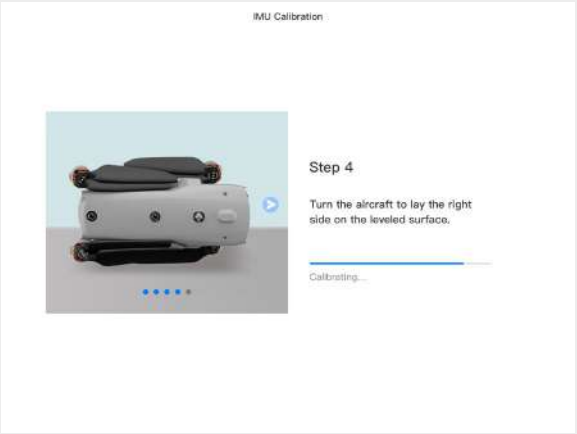
6	Fold the arms, turn the drone nose up, and lay it on the leveled surface until the interface prompts calibration success. Be careful not to bump the rear camera lens.	

Tip

- Please perform the calibration steps according to the tips shown in the IMU calibration interface of the flight application.
- If the calibration fails, repeat the above steps.

2.12.3 Gimbal Calibration

The gimbal of the drone has been calibrated at the factory, and users do not have to do auto calibration on the gimbal usually.

If the flight application prompts an alert ”Please calibrate the gimbal motor”, please follow the steps below to calibrate it.

Table 2-6 Gimbal Calibration

Step	Operation	Diagram
1	Place the drone on a flat ground. After turning on the drone and the remote controller, keep the drone in a static state. In the main interface of the flight application, tap “⊞” > “⚙” > “📷” > “Gimbal Calibration” > “Start Calibration”.	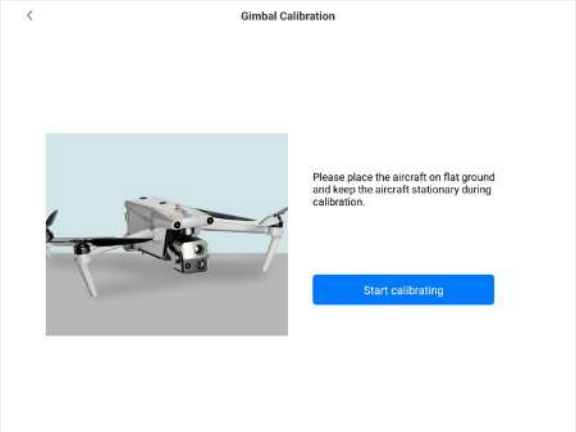
2	Wait for the calibration progress bar to reach 100%. When “Calibration Successful” is displayed on the screen, the gimbal is successfully calibrated.	

2.13 Emergency Stop Propellers During Flight

During flight, if the power motors of the drone experience power damage or failure (e.g., damaged or missing propellers and motor failure) that makes the drone out of control, users can enable the "Emergency Stop Propellers During Flight" function. At the same time, users need to manipulate the left and right sticks on the remote controller inward or outward to forcibly stop propeller rotation and allow the drone to descend freely for an emergency landing. This can reduce the potential damage to property and harm to ground personnel caused by drone malfunctions.

In the event of a drone malfunction, users should at first attempt to manipulate the sticks to move the drone away from crowds or buildings and lower the altitude and horizontal speed of the drone before enabling the emergency propeller stop function. For how to enable this function, see “6.5 “Settings” Interface” in Chapter 6.

Important

- If you stop the propellers when the drone has an initial velocity, the drone will fall along a parabolic trajectory. If the trajectory is unpredictable, do not stop the propellers.

- After completing an emergency landing, contact Autel Robotics promptly for a power system inspection and maintenance.

2.14 Remote Identification

The Remote Identification system allows for uploading the registration number (Remote ID) of a UAS operator to the system. During flight, it can actively broadcast some non-sensitive data to mobile devices within its broadcast range in real time via an open, documented transmission protocol. The non-sensitive data includes the registration number of the operator, the unique serial number and timestamp of the drone, the drone's geographical location, altitude above ground level or take-off point, route measured clockwise from true north, and ground speed of the unmanned aircraft, and the geographical location of the operator (if available, otherwise the geographical location of the take-off point). This system not only effectively controls potential risks to public safety posed by unmanned aircraft during flight but also provides effective information and data tools for unmanned aircraft flight regulation.
The drone supports the remote identification function and uses Wi-Fi (Wi-Fi Beacon, 802.11n) for broadcasting. Users can enter the corresponding Remote ID in the flight application.

Tips

- At present, in some countries and regions, it is mandatory to enable the remote identification function. When users are operating drones in relevant airspace, please follow local laws and regulations.
- Operation Path (in places except Chinese Mainland): On the main interface of the flight application, tap "" > "" > "" > "Safety" > "Remote ID," and follow the on-screen instructions to perform relevant operations. For more information, see "6.5 "Settings" Interface" in Chapter 6.
- In Chinese Mainland, drones that have completed real-name registration on the UOM platform will automatically turn on Remote ID broadcasting and report flight dynamic data to the UOM platform after completing power-on self-check.
- When the drone is in automatic check process after being turned on or in flight, if the remote identification function is detected as being abnormal, the flight application will prompt an alert "Remote ID anomaly, please comply with air traffic regulations during flight", the RC will emit sound alert at the same time.

2.15 Standard Flight Operation Process

2.15.1 Pre-Flight Checklist

Before each flight, please follow the steps below to perform a comprehensive pre-flight check to ensure flight safety:

- Make sure that the batteries of the drone and remote controller are fully charged, and the battery of the drone is installed in place, with the unlock button of the battery in a lock state.
- Make sure that the propellers of the drone are installed tightly without damage or deformation, the motor and propellers are clean and free of foreign objects, and the propellers and arms are fully extended.

- Make sure that the visual obstacle avoidance cameras of the drone, the lens of the gimbal, and the lens of the auxiliary light are free from foreign objects, dirt, or fingerprints, have their protective stickers removed, and are not blocked by loads or other accessories on the fuselage.
- Make sure that the protective cover of the gimbal has been removed and that the three-axis movement of the gimbal is in a normal state.
- Make sure that the microSD card is inserted into the drone, and that the rubber protective covers on the microSD card slot and PSDK Port are closed firmly. Otherwise, the protection performance of the drone will be affected.
- Make sure that the antenna of the remote control is unfolded.
- Place the drone in an open and flat area outdoors and make sure that there are no obstacles, buildings, trees, etc. around. You should stand at least 10 meters away from the tail of the drone when operating.
- Make sure that after the drone is powered on, the drone and the remote controller are connected, and the drone motors, gimbal, and camera are working normally.
- Make sure that the drone, the remote controller and the flight application have been upgraded to the latest version as prompted.
- Make sure that all warnings and errors displayed on the flight application are handled.
- Enter the flight application settings interface to set the flight control parameters, obstacle avoidance behavior, stick mode, and other related flight safety parameters, and be familiar with the flight operation, so as to ensure that the parameter settings meet your own needs and guarantee flight safety.
- If multiple drones are flying at the same time, please keep an appropriate air distance to avoid any accidents.

⚠ Warning

- Please note that in order to ensure personal safety, before taking off the drones in A-Mesh Link mode, you should strictly ensure that the horizontal distance between the drones on the ground is at least 5 meters, and the user needs to stand at least 10 meters away from the tail direction of all drones. If you do not maintain a safe distance as required, the drones may get close to people and cause injuries when automatically adjusting the distance after taking off.

2.15.2 Basic Flight Process

The drone provides three stick modes: Mode 1, Mode 2, and Mode 3. Each mode controls the drone differently. The default mode is Mode 2. You can switch the mode in the flight application according to your control habit (For how to switch the mode, see “6.5 “Settings” Interface” in Chapter 6). The following is the basic operation of drone flight:

1. Please refer to "2.15.1 Pre-Flight Checklist" to complete the preparations before flight.
   a) Place the drone in an open and flat area outdoors and make sure that there are no obstacles, buildings, trees, etc. around. If in A-Mesh Link mode, the horizontal distance between drones should be maintained at least 5 meters.
   b) Press and hold the power button of the remote controller for 3 seconds to turn on the remote controller.

c) Press and hold the power button of the drone for 3 seconds to turn on the power of the drone and wait for the Video Transmission screen to appear on the remote controller (indicating that the current status is normal).
d) Stand at least 10 meters away from the tail of (all) drones.

2. Please refer to "4.10.3 Starting/Stopping the Drone Motor" in Chapter 4 to use the remote controller to start the drone and take off.
3. Please refer to "4.10.1 Stick Modes" and "4.10.2 Setting Stick Mode" in Chapter 4 to control the drone carefully.
4. Please refer to "4.10.3 Starting/Stopping the Drone Motor" in Chapter 4 to land the drone, and then turn off the motors.

When the drone performs power-on self-test and any of the following situations occurs, the following strategies will be implemented to ensure flight safety.

Table 2-7 Power-on self-test flight strategy

Flight strategy	Takeoff Denied	Takeoff Accepted
Abnormal Items	● IMU Abnormal ● Battery Verification Abnormal ● The battery is not installed properly ● Drone ESC Abnormal ● RTK not Fixed in Mission Flight ● Internal Communication Abnormal ● Barometer Abnormal ● Remote Identification Abnormal (only in US)	● Compass Abnormal ● RTK not Fixed but not in Mission Flight ● Drone in attitude mode ● Remote Identification Abnormal (in countries or regions except US)

2.15.3 List of Safeguard

Before flight, please know the following safeguard information, which helps you handle abnormal situations in a correct and safe way.

Table 2-8 List of Safeguard

No.	Safety Function	Refer To
1	Auto-Return	2.7 Auto-Return
2	Emergency Propeller Stop During Flight	2.13 Emergency Propellers Stop During Flight

2.15.4 Post-flight Inspection Checklist

After each flight, please follow the steps below to perform a comprehensive post-flight check to ensure the safety of the UAS.

- After the flight, the drone should be landed on an open, flat, solid ground, and avoid landing on sand, wetlands, sloping ground or moving platforms.
- The landing point must be away from people or animal activity areas. When landing, you should maintain a horizontal distance of at least 5 meters from the landing point.
- After the drone lands, the drone motor should be turned off immediately before approaching the drone. Before performing a visual inspection, the drone power should be turned off.
- During the visual inspection, please check the visual obstacle avoidance cameras of the drone, the lens of the gimbal, and the lens of the auxiliary light to ensure that there are no foreign objects or dirt on the surface. If there is, please wipe it clean with a dry soft cloth.
- During the visual inspection, please check the appearance of the drone fuselage and the drone motor to ensure that the fuselage is not damaged, cracked, or loose, and the drone motor is not blocked. If there is, please stop using it and contact after-sales.
- Please check the propeller to ensure that there is no damage, looseness, deformation, etc. If there is, please replace it with a new propeller in time.
- Remove the smart battery from the drone and check whether the battery interface and appearance are abnormal. If the battery structure or interface is damaged, or there is bulging, leakage, etc., the battery should be stopped immediately and properly handled as required.
- After the above inspections are completed, install the gimbal protective cover for the drone, fold the drone arm as required, and store the drone and smart battery in the rugged case.
- Wipe the surface of the remote controller used clean, fold the antenna as required, and store the remote controller in the rugged case.

2.16 Warning Information Reference Table

During the entire flight phase, the abnormal status of the UAS will display on the left side of "6.3 Status Notification Bar" in the flight application. Users can query the following information reference table to understand the common status warning information prompts of the UAS.

Table 2-9 Warning Information Reference Table

No.	Warning level	Warning Message	Note
1	Medium-level	Mission has been aborted due to app operation.	
2	High-level	IMU is warming up. Take off later	
3	High-level	Cannot take off due to IMU error. Calibrate IMU first.	
4	Medium-level	Signal error.	
5	Medium-level	Remote ID is abnormal, please comply with air traffic control regulations to fly	In countries or regions except US
6	High-level	Remote ID is abnormal, takeoff is prohibited according to local regulations	Only in US
7	High-level	Remote ID is abnormal, returning.	Only in US, in flight

8	Medium-level	RTK is not ready, please take off later.	
9	Medium-level	Unstable RTK signal. Fly with caution.	
10	High-level	SD card read error. Replace it.	
11	High-level	SD card is full. Storage location will switch to internal storage	
12	High-level	Visual SLAM has been disabled. Fly with caution.	
13	Medium-level	Zoom camera error	
14	Medium-level	OA is abnormal and will be temporarily turned off. Please fly with caution.	
15	High-level	Some propellers are stopped. Land immediately.	
16	Medium-level	Currently in a no-fly zone, aircraft starts to descend, please be careful.	
17	High-level	Aircraft is in No-Fly Zone, cannot take off.	
18	High-level	Battery voltage difference too large, takeoff prohibited.	
19	High-level	Battery voltage error, please restart the aircraft.	
20	Medium-level	The flight speed is limited due to the low battery voltage.	
21	High-level	Battery voltage error. Land immediately.	
22	Medium-level	Battery powered-off, please long press the power button to power on!	
23	High-level	Battery over-discharged, please replace the battery.	
24	High-level	Battery data abnormal, takeoff prohibited.	
25	High-level	Battery not installed properly. Takeoff is forbidden.	
26	High-level	Battery temperature too low, flight speed limited.	
27	High-level	Battery temperature too low, please preheat before use.	

28	High-level	The battery temperature is too high. Wait until battery cools down.	
29	High-level	Battery temperature is too high. Return or land immediately.	
30	High-level	Battery temperature too low, please reduce flight speed.	
31	High-level	Battery temperature too high, please reduce flight speed.	
32	High-level	Battery pressure difference too large, takeoff prohibited.	
33	High-level	Battery voltage difference is too large, please replace the battery.	
34	High-level	Battery voltage difference is too high. Return or land immediately.	
35	High-level	Battery error. Check or replace the battery.	
36	High-level	The motor temperature is too high. Please lower the flight speed.	
37	Medium-level	ESC Error	
38	Medium-level	Low battery, returning to home.	
39	Medium-level	Focus failed. Check the camera.	
40	Medium-level	The motors' power is too high, please check the payload.	
41	High-level	Flight control error. Land immediately	
42	High-level	Flight mission abnormality, please restart the aircraft.	When the aircraft is not taking off
43	Medium-level	Mission error. Fly with caution.	
44	Medium-level	Aircraft enters warning zone	
45	Medium-level	The aircraft battery level is too low to take off	
46	High-level	The aircraft is close to the no-fly zone.	
47	Medium-level	Aircraft enters critical warning zone	
48	High-level	Aircraft is tilted, please place it on a flat surface.	

49	High-level	Aircraft is not activated	
50	High-level	Aircraft is outside the flyable area, takeoff prohibited.	
51	High-level	Aircraft is outside the flyable area, returning.	
52	High-level	Aircraft abnormal vibration, takeoff prohibited, please contact customer service.	
53	High-level	Aircraft abnormal vibration, please return or land as soon as possible, and contact customer service.	
54	High-level	The aircraft is close to the warning zone.	
55	High-level	Aircraft is disconnected from the remote controller	
56	Medium-level	GNSS Spoofing	
57	Medium-level	Aircraft attitude initializing...	
58	High-level	Aircraft attitude error. Land immediately	
59	High-level	The aircraft cannot fly steadily due to strong wind. Fly with caution.	
60	High-level	The payload exceeds the weight limit, please check the payload and try again.	
61	Medium-level	Wide camera error	
62	Medium-level	Failed to update firmware	
63	Medium-level	The mission has been completed.	
64	Medium-level	Clean the rear-view lens.	
65	High-level	Low ambient light, only radar obstacle avoidance is operational, please be cautious.	
66	High-level	Both side OA sensors are invalid in current low light environment. Fly with caution.	
67	Medium-level	Please check if the propellers are properly installed.	
68	High-level	Aircraft Impact detected	
69	Medium-level	Approaching Max. motor limit	

70	Medium-level	Approaching Min. motor limit	
71	Medium-level	Laser rangefinder error.	
72	High-level	Internal storage is full. Switching to SD card.	
73	High-level	Radar data error. Restart the aircraft.	
74	Medium-level	Radar overheated	
75	High-level	Radar is abnormal, please restart the aircraft	
76	High-level	Radar self-check failed, please restart the aircraft	
77	High-level	Front or rear OA sensor error.	
78	Medium-level	Clean the front-view lens.	
79	High-level	Please check the gimbal	
80	Medium-level	Please power on the aircraft or connect to a new aircraft	
81	Medium-level	Please confirm whether the propellers are well installed.	
82	High-level	Please calibrate IMU	
83	High-level	Please calibrate the gimbal motor	
84	High-level	Barometer error. Cannot take off	
85	Medium-level	Mission completed, returning to home.	
86	Medium-level	Clean the upper-view lens.	
87	High-level	Upward or downward OA sensor error.	
88	Medium-level	Visual Positioning disabled, please fly with caution.	
89	High-level	Non-GNSS environment. Turn off Novice Mode to take off.	
90	High-level	Invalid battery, takeoff prohibited.	
91	Medium-level	Clean the bottom-view lens.	
92	High-level	The RC battery temperature is too high. Wait until the battery cools down.	

93	High-level	Aircraft disconnected.	
94	Medium-level	Mission has been aborted due to remote control input.	
95	High-level	Abnormal right dial wheel. Release or calibrate it.	
96	High-level	Abnormal right stick. Release or calibrate it.	
97	Medium-level	Gimbal reached the mechanical limit. Check the gimbal or calibrate compass.	
98	High-level	Gimbal stuck error, please check	
99	High-level	Gimbal overheated, please check	
100	Medium-level	Gimbal failed	
101	Medium-level	Gimbal is not ready, please take off later.	
102	High-level	Gimbal and flight control communication disconnected	
103	High-level	Gimbal calibration failed, please check	
104	Medium-level	The visual sensors could be affected by rains and fogs, please disable OA and fly with caution.	
105	Medium-level	Heading to home point	
106	Medium-level	Calibrating compass	
107	High-level	Compass needs calibration, please calibrate before flight.	
108	High-level	Compass anomaly, takeoff prohibited, please contact after-sales for handling.	
109	Medium-level	Status error, RTH bypass is disabled.	
110	High-level	Abnormal left dial wheel. Release or calibrate it.	
111	High-level	Abnormal left stick. Release or calibrate it.	
112	High-level	Left and right OA and SLAM failed, please fly with caution.	

Chapter 3 Drone

3.1 Drone Activation

When unboxing the product for the first time, you need to activate the drone before using it. By default, the drone is pre-matched with the remote controller at the factory. After turning on the drone and the remote controller, you will see an activation prompt in the flight application. Please follow the steps in the flight application to activate the drone.

Important

- Make sure that the remote controller is connected to the Internet before starting the activation process. Otherwise, activation may fail.
- If activation fails, please contact Autel Robotics After-Sales Support for assistance.
- After completing the drone activation, users in Chinese mainland should download the UOM app as prompted to complete the drone real-name registration.
- For how to match the drone with the remote controller in frequency, see "4.9 Frequency Matching Between the Drone and the Remote Controller" in Chapter 4.

3.2 Drone Components

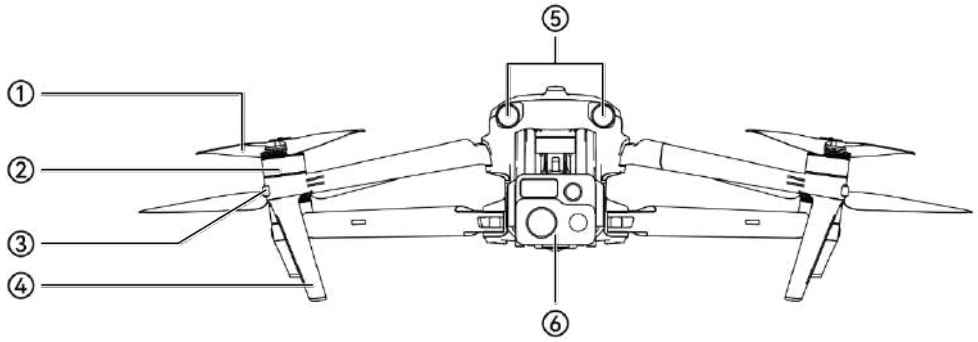

Fig 3-1 Drone Front View

Table 3-1 Drone Front View Details

No.	Name	Description
1	Propeller	Rotates in the air to generate thrust to propel the drone forward.
2	Motor	Used to drive the propeller to rotate.
3	Front Arm Light	The heading light is mainly used to identify the nose direction of the drone.
4	Landing Gear	Used to support the drone to avoid damage to the bottom of the fuselage.

5	Forward Visual Obstacle Avoidance Sensing Lens Group	Used to sense the obstacles ahead and avoid the drone from colliding with them.
6	Gimbal	Integrates multiple sensors for stable shooting or measurements during flight.

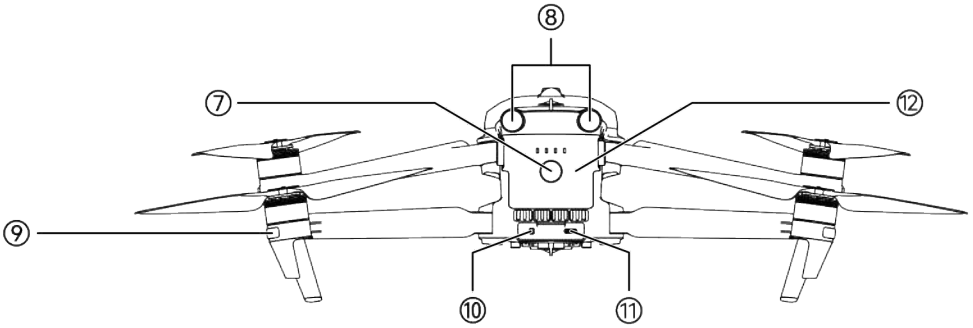

Fig 3-2 Drone Rear View

Table 3-2 Drone Rear View Details

No.	Name	Description
7	Power Button	Press and hold the power button for 3 seconds to start the drone. ➢ After the drone is powered on, quickly press the power button twice to enter Single Link mode. ➢ After the drone is powered on, press its power button quickly and press and hold the button until the rear arm lights turn yellow and blink quickly to enter A-Mesh Link mode.
8	Rear Visual Obstacle Avoidance Lens Group	Used to sense the obstacles in the rear and avoid the drone from colliding with them.
9	Rear Arm Light	The status light is mainly used to display the current flight status of the drone.
10	microSD Card Slot	For inserting a microSD card.
11	USB-C Port	Used to connect to a computer for firmware updates or debugging, it can also connect some mounts.
12	Smart Battery	Installed in the drone battery compartment and used to provide energy for drone operation.

⚠ Warning

- The USB-C Port of the drone cannot be used for charging. Do not connect the included remote controller charger. For how to charge the drone, see "5.3.5 Charging the Smart Battery" in Chapter 5.

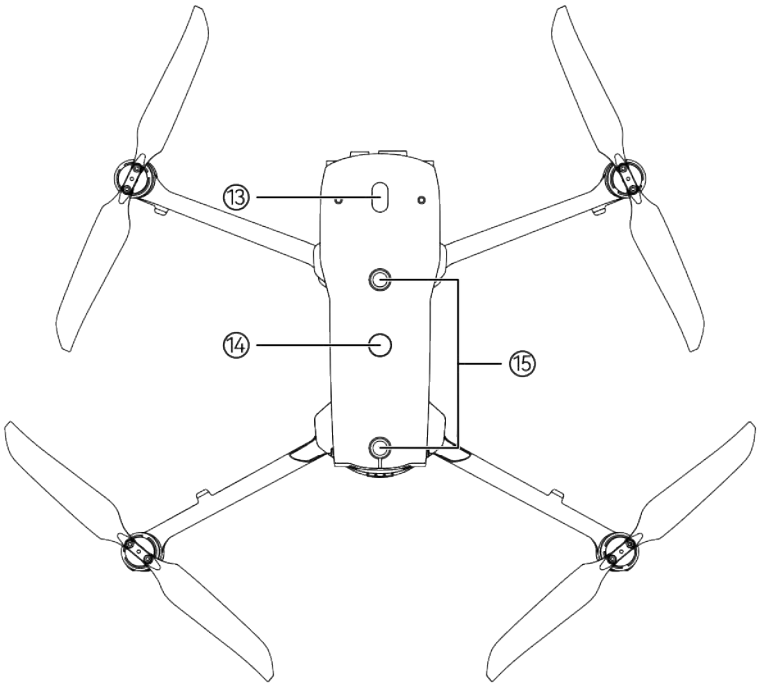

Fig 3-3 Drone Top-Down View

Table 3-3 Drone Top-Down View Details

No.	Name	Description
13	Mount Extension Port	Additional mounts can be added to the drone fuselage through the Extension Port (PSDK port), such as speaker, spotlight, and RTK module.
14	Strobe	Emits high-intensity strobe light to indicate the position of the drone at weak light conditions to avoid air traffic accidents.
15	Upward Visual Obstacle Avoidance Lens Group	Used to sense obstacles above, and to the left and right of the drone and avoid collisions.

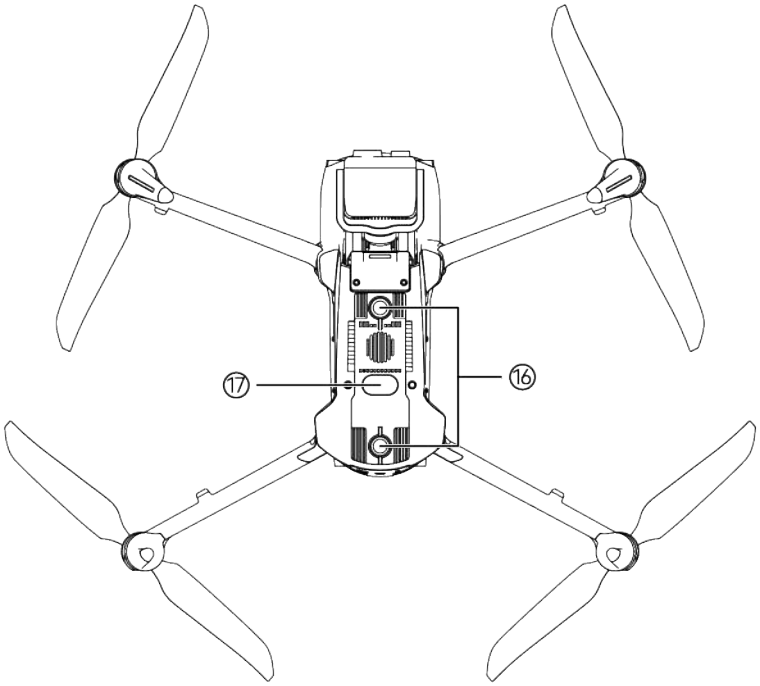

Fig 3-4 Drone Bottom-Up View

Table 3-4 Drone Bottom-Up View Details

No.	Name	Description
16	Downward Visual Obstacle Avoidance Lens Group	Used to sense obstacles below, and to the left and right of the drone and avoid collisions.
17	Auxiliary Light	An LED auxiliary light. In weak light conditions, it is used to enhance the ambient brightness of the landing area during the landing process, improve downward visual sensing performance, and ensure the safe landing of the drone.

⚠ Warning

- There is a rubber protective cover in the port area on the rear side of the fuselage to protect the microSD card slot, external SSD Port, and USB-C Port. Please make sure that the protective cover is closed firmly during the flight.
- Do not disassemble the components that have been installed at the factory (except for the components explicitly permitted in the description in this manual), otherwise, the product warranty will be invalid.
- Please prevent the 6 millimeter-wave radars inside the fuselage from being blocked by foreign objects. The six millimeter-wave radars are located in the middle of the forward visual obstacle avoidance lens group, the middle of the rear visual obstacle avoidance lens group, the middle of the top shell, the middle of the side shell near the top shell, and near the fisheye lens at the bottom shell of the fuselage, respectively.

3.3 Propeller

Propellers are consumable parts that require regular maintenance and replacement to ensure the safe flight of the drone.
The drone uses a quick-release propeller design, making it easy for you to replace them.

	● Keep body parts away from the rotating propellers to avoid injury.

3.3.1 Replacing Propellers

The propellers are installed in the drone by default at the factory, and users are not required to install them usually. If the propellers are damaged (e.g., broken or damaged blades), please replace them with new ones before flight.

Tips

- Drone propellers are consumable parts. If needed, please purchase them from Autel Robotics.
- The propeller model is marked on the blade. You can check the model of a propeller at the edge of the blade near the propeller center shaft.
- Propellers cannot be installed on the wrong propeller mounts. Please carefully distinguish between propellers and mounts.
- Autel Robotics provides two spare propellers for each drone (with models 1158CW and 1158CCW respectively). Please refer to the “Packing List” and packaging for details.

Important

- After long use, the blades of propellers might deform, leading to tightness issue. In this case, please replace them in time.

■ Detaching the Propellers

1. Press and hold power button of the drone for 3 seconds to power off the drone.
2. First hold the rotor of the motor on the arm below the propeller to prevent it from rotating, press down on the propeller center shaft firmly, and then turn it in the unlocking direction marked on the propeller center shaft to detach the propeller.

■ Installing the Propellers

When installing the propellers, strictly follow the following instructions:

1. Make sure that the drone is powered off before installing the propellers.
2. The drone needs to be installed with two models of propellers, that is, CW and CCW, with two of each model. The CCW propellers have a white circle mark at the center shaft, while the CW propellers do not have this mark at the center shaft.
3. There are two types of propeller mounts on the power motors of the drone. The mounts with a white circle mark at the center shaft are for CCW propellers, while the mounts without this mark are for CW propellers.

4. Place a propeller on the corresponding propeller mount. Make sure that the buckle at the center shaft of the propeller aligns with the slot on the mount. Hold the rotor of the motor below the propeller to prevent it from rotating, press down on the propeller center shaft firmly, and then turn it in the locking direction marked on the center shaft to secure the propeller in place.

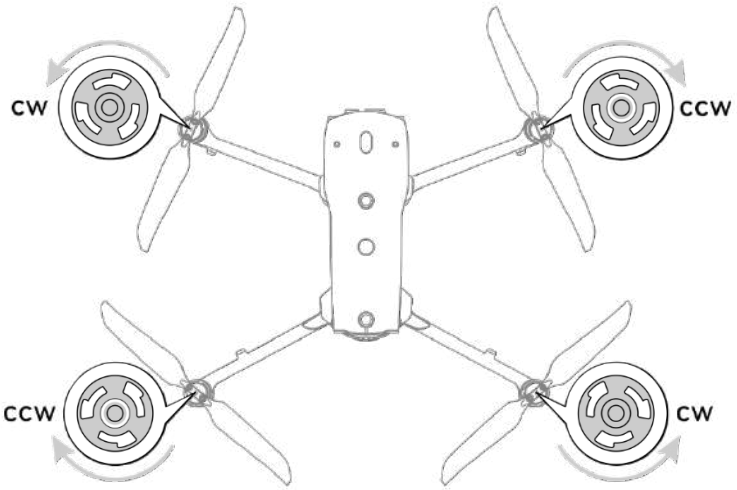

Fig 3-5 Install the Propellers

Table 3-5 Propeller Installation Details

Propeller Model	CCW (White circle on the center shaft)	CW (No white circle on the center shaft)
Installation Area	Mounts with a white circle mark	Mounts without white circle mark
Lock/Unlock	Lock orientation: Turn the propeller this way: to tighten it into the mount. Unlock orientation: Turn the propeller this way: to remove it from the mount.	

⚠ Warning

- When fully loaded, the propeller speed can reach a maximum of 7500 revolutions per minute, so please pay attention to safety.
- Before each flight, make sure that all propellers are in good condition. If there are aged, damaged, or deformed propellers, please replace them before the flight.
- Before each flight, make sure that all propellers are mounted correctly and securely.
- Please use the propellers provided by Autel Robotics. Do not mix propellers of different models.
- Before replacing propellers, make sure that the drone is powered off.
- Propeller edges are sharp. When replacing propellers, it is recommended to wear protective gloves.
- Stay away from rotating propellers or motors to avoid injuries.
- Before testing the drone on the ground, make sure that the propellers are removed.

3.4 Fold/Unfold The Arms

Before using the drone, please make sure that the front and rear arms of the drone are fully unfolded. After using the drone, clean the surface of the drone in time, fold the arms, retract the propellers, and place the drone in the rugged case.

- When unfolding the arms, please unfold the front arms of the drone first, and then unfold the rear arms of the drone to avoid spatial interference.
- When folding the arms, please fold the rear arms first, and then fold the front arms to avoid spatial interference.

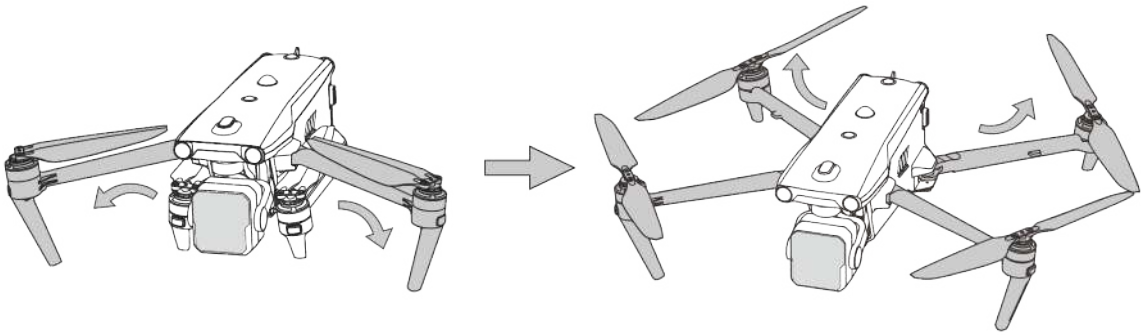

Fig 3-6 Unfold the Arms

Tips
● After unfolding arms of the drone, please place the drone on an open level ground.

3.5 Arm Light

There is an LED indicator at the end of each arm of the drone. The front arm light is the heading light, and the rear arm light is the status light. After the drone takes off, the front arm lights will blink periodically, which can help you identify the direction of the drone nose; the rear arm lights will display the current flight status of the drone.

The front arm light is green when it lights up, and the rear arm light can display green, yellow, and red depending on the scene.

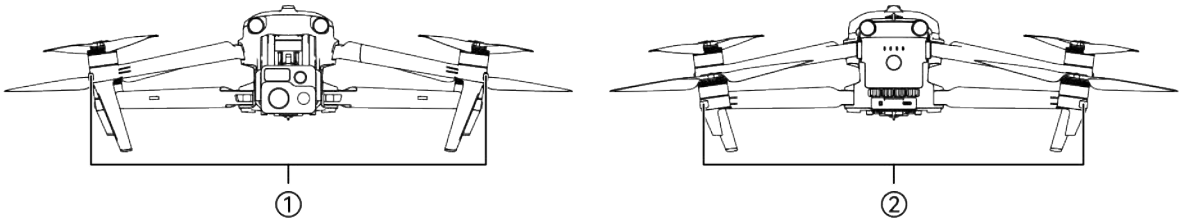

Fig 3-7 Arm Light

Table 3-6 Arm Light Status Details

Scence	①: Front Arm Light (Periodic state)	②: Rear Arm Light (Periodic state)
Remote Controller Not Connected to Drone	Green: 1s on/1s off	Yellow: 0.25s on/0.25s off

Start Compass Calibration	Green: 1s on/1s off	Yellow: 0.25s on/0.25s off
Current Step Calibration Successful	Green: 1s on/1s off	Green: 0.25s on/0.25s off
Compass Calibration Successful	Green: 1s on/1s off	Green: always on
Compass Calibration Failed	Green: 1s on/1s off	Red: always on
IMU Calibration	Green: always on	Red: 0.5s on/0.5s off
Low Battery Warning	Green: 1s on/1s off	Red: 0.5s on/1.5s off
Critical Low Battery Warning	Green: 1s on/1s off	Red: 0.25s on/0.25s off
IMU Abnormal	Green: 1s on/1s off	Red: always on
Illegal Battery	Green: 1s on/1s off	Red: 0.5s on/1.5s off
Magnetometer Abnormal	Green: 1s on/1s off	Red: 0.5s on/1.5s off → Yellow: 0.5s on/1.5s off
GNSS Mode	Green: 1s on/1s off	Green: 1s on → Red: 1s on* ** When the front arm light turn off, the rear arm light turns red.*
Attitude Mode	Green: 1s on/1s off	Green: 1s on → Red: 1s on* ** When the front arm light turn off, the rear arm light turns red.*
Take Off	Green: always on	Green: 0.5s on/1.5s off
Take off with Caution	Green: 1s on/1s off	Yellow: 0.25s on/0.25s off
Single Link	Green: 0.05s on/0.05s off	Green: 0.05s on/0.05s off
A-Mesh Link	Green: 0.05s on/0.05s off	Yellow: 0.05s on/0.05s off
Link Successful	Green: 0.05s on/0.05s off	Green: always on
Link Failed	Green: 0.05s on/0.05s off	Red: always on
Firmware Updating	Green: 0.1s on/0.1s off	Green: 0.1s on/0.1s off
Firmware Update Successful	Green: always on	Green: always on
Firmware Update Failed	Green: always on	Red: 0.5s on/0.5s off

Getting Logs	Green: always on	Green: 0.25s on/0.25s off→ Yellow: 0.25s on/0.25s off
Drone Search	Green: 1s on/1s off	Red: 0.5s on/1.5s off
Initializing Flight Mission	Green: always on	Red: 0.2s on → Yellow: 0.2s on → Green: 0.2s on → All: 0.4s off

3.6 Strobe

The drone is equipped with a strobe at the top of the fuselage to help identify the drone when flying at night. You can manually turn the strobe on or off in the flight application.

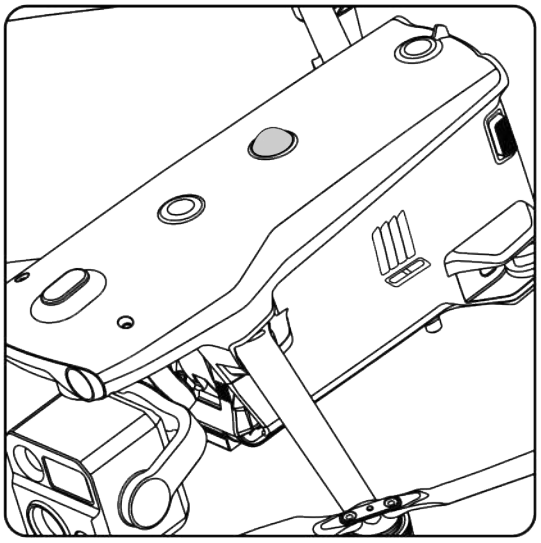

Fig 3-8 Strobe

Tip

- For how to turn the strobe on or off, see "6.4 Toolbar" and "6.5 "Settings" Interface" in Chapter 6.

Warning

- Do not look directly at the strobe while they are on to avoid vision damage caused by strong light.

3.7 Auxiliary Bottom Light

The drone is equipped with auxiliary bottom lights (LED auxiliary lights) at the bottom of the fuselage. The lights are used to assist the downward visual obstacle avoidance lens group when the drone is landing in weak light environments, so as to ensure better visual positioning performance and enhance the landing safety of the drone. You can manually turn the bottom LED auxiliary lights on or off in the flight application.

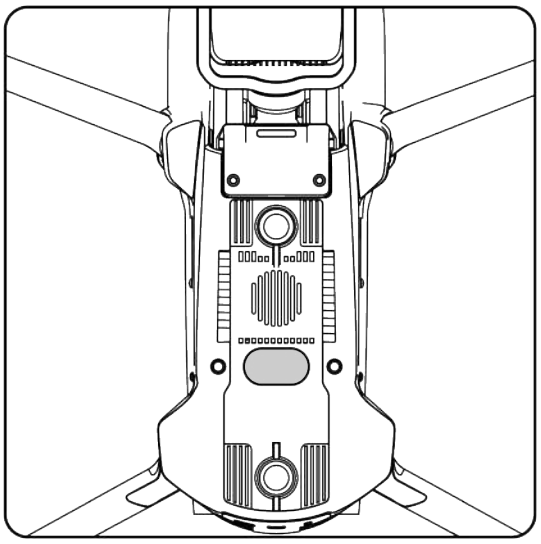

Fig 3-9 Auxiliary Light

Tip

- For how to turn the auxiliary bottom lights on or off, see "6.4 Toolbar" and "6.5 "Settings" Interface" in Chapter 6.

Warning

- When the auxiliary bottom lights are set to auto mode, they will turn on automatically at an altitude of around 5 meters above the ground when the drone is landing and the ambient light is insufficient, and they will turn off automatically after successful landing.

3.8 Gimbal Camera

The EVO Max series V2 multi-rotor drone supports three types of gimbals, namely Fusion 4T V2 gimbal, Fusion 4N V2 gimbal and Fusion 4NZ-L V2 gimbal. The configurations of the relevant drones are as follows:

- The EVO Max 4T V2 is equipped with the Fusion 4T V2 gimbal, which integrates a high magnification zoom camera, a wide-angle camera, an infrared thermal camera, and an a laser rangefinder, allowing you to clearly shoot vehicles and boats up to 2 kilometers away and provide capabilities such as target thermal imaging, positioning, and ranging for flight operations.
- The EVO Max 4N V2 is equipped with the Fusion 4N V2 gimbal, which integrates a super-starlight night vision camera, a wide-angle camera, an infrared thermal camera, and a laser rangefinder, it has outstanding shooting performance under low-illuminance environments and provides capabilities such as target thermal imaging, positioning, and ranging for flight operations.
- The EVO Max 4NZ V2 is equipped with the Fusion 4NZ-L V2 gimbal, which integrates a wide-angle night vision camera, a telephoto night vision camera, an infrared thermal camera, and a laser rangefinder, and infrared laser fill light, it also has outstanding shooting performance

under low-illuminance environments and provides capabilities such as target thermal imaging, positioning, and ranging for flight operations.

3.8.1 Camera Structure

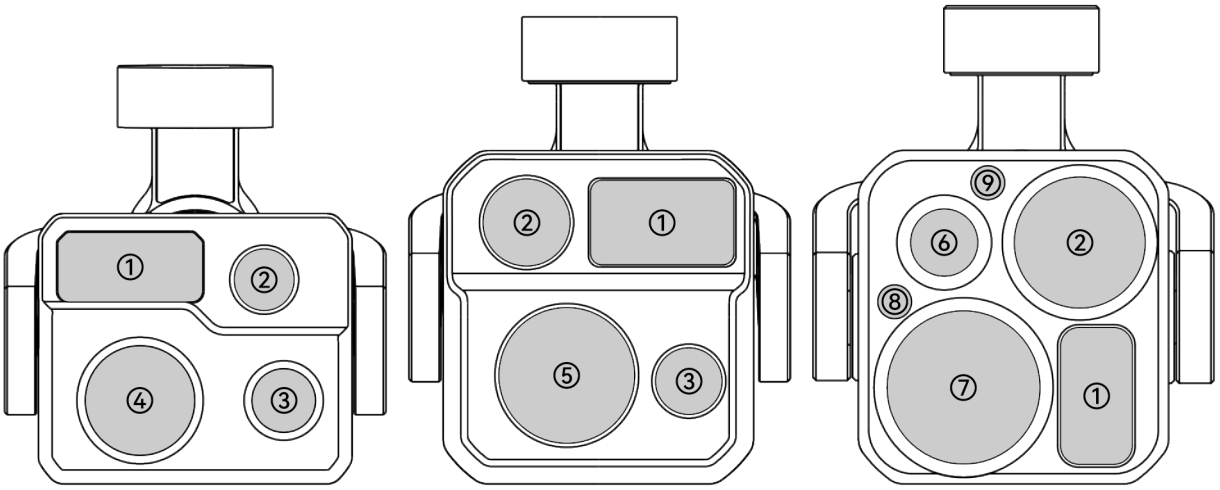

Fig 3-10 Drone Gimbal Camera Layout

Table 3-7 Drone Gimbal Camera Layout Details

No.	Name	Description
1	Laser Rangefinder	The laser ranger finder accurately determines the distance by measuring the time from the beginning of the laser emission to the time when the laser is reflected from the target. Measuring range: 5-1200 meters.
2	Infrared Thermal Imaging Camera	The infrared thermal imaging camera is used for radiometric measurement and night vision, which can monitor the temperature distribution of the measured target in real time, so as to judge the state of the target. Radiometric temperature range: -20℃ ~ +150℃ (high gain mode) and 0℃ ~ + 550℃ (low gain mode).
3	Wide-angle camera	The wide-angle camera is used to capture images with a larger field of view within a shorter shooting distance. Fusion 4N V2 gimbal: 1/0.98" CMOS, 50 million effective pixels, and 85.01° field of view. Fusion 4T V2 gimbal: 1/2" CMOS, 48 million effective pixels, and 83.4° field of view.
4	Zoom Camera	The zoom camera is used to shoot distant scenes, making the distant scenes clearer. 1/2" CMOS, 48 million effective pixels, 10x continuous optical zoom, 20x hybrid zoom and 160x digital zoom.

5	Night Vision Camera	The night vision camera is used for clear imaging in low-illuminance environments (such as nighttime). 0.0001 Lux ambient illumination recognition and 1920×1200 resolution.
6	Wide-angle Night Vision Camera	The wide-angle night vision camera is used for clear imaging in low-illuminance environments (such as nighttime). It can capture images with a larger field of view within a shorter shooting distance. 1/1.2" CMOS, 3840×2160.
7	Telephoto Night Vision Camera	The telephoto night vision camera is used for clear imaging in low-illuminance environments (such as nighttime). It can shoot distant scenes, making the distant scenes clearer. 1/1.2" CMOS, 3840×2160.
8	Infrared laser fill light	Enhance the shooting effect of telephoto night vision cameras in low-light environments (such as nighttime).
9	Infrared laser fill light	Enhance the shooting effect of wide-angle night vision cameras in low-light environments (such as nighttime).

⚠ Warning

- Do not point the infrared thermal imaging camera at intensive energy sources such as the sun, lava, laser beams, and molten iron, to avoid damage to the infrared detector.
- The temperature of the observation target should be less than 600 ℃. Observing objects with temperatures above this limit may result in damage to the infrared detector.
- The laser rangefinder is a Class 1 laser product, please use it with confidence.
- The infrared laser fill light is a Class 3B laser product. When using it, please avoid exposure to the light beam.

3.8.2 Camera Operations

■ Control Camera by RC Functional Buttons

- Right dial wheel: Used to adjust the zoom factor of the selected camera. Turn left to reduce the zoom factor, and turn right to increase the zoom factor.
- Video recording button: Press the button to start video recording and press again to end video recording.
- Shooting button: Press the button to take photos.

Tip

- For the control operations of the remote controller, please see “4.1.1 Remote Controller Components” in Chapter 4.

■ Control Camera in the Flight Application

For details about how to control the camera in the flight application, see "6.8 Camera Interfaces" in Chapter 6.

3.9 Drone Gimbal

The drone is equipped with a three-axis stabilized gimbal with a high-precision motor structure, which can ensure stable camera shooting when the drone is flying.

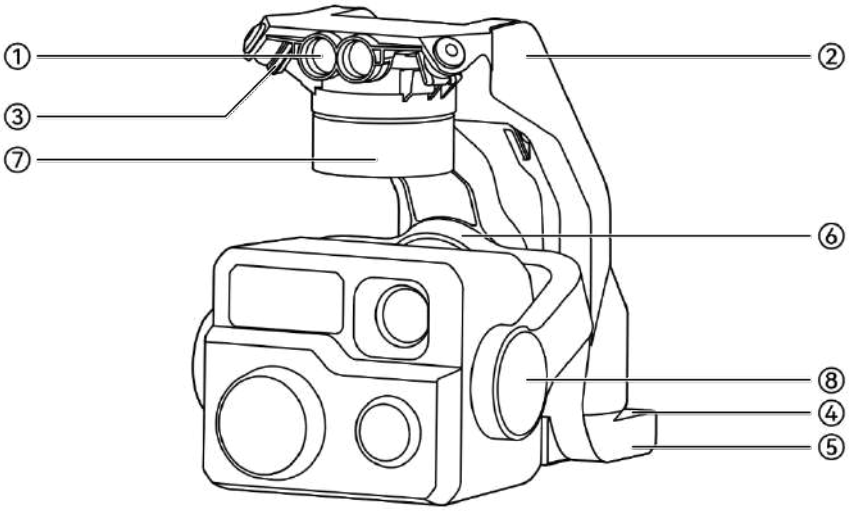

Fig 3-11 Gimbal Structure (Fusion 4T V2 gimbal)

Tip

- Please note that, except for differences in lens layout, the structure of the Fusion 4T V2 gimbal, that of the Fusion 4N V2 gimbal and that of the Fusion 4NZ-L V2 gimbal are the same or similar.

Table 3-8 Gimbal Structure Details

No.	Name	Description
1	Cylindrical Holes	The two cylindrical holes at the front of the gimbal dampener mount are used to fix one side of the gimbal dampener mount to the two fixed pins in the drone nose gimbal compartment.
2	Dampener Mount	Used to support dampeners and gimbal.
3	Dampener	Used to buffer the vibration of the gimbal.
4	Connector	The connector of the gimbal is connected to the connector slot at the bottom of the drone fuselage.
5	Connector Cover	The protective cover above the connector is used to fix the other side of the gimbal dampener mount to the bottom of the drone fuselage.

6	Roll Axis Motor	Used to control the moving range of the gimbal to roll left or right (mechanical range: -50° ~ +50°,).
7	Pan Axis Motor	Used to control the moving range of the gimbal to rotate left or right with its own axis (mechanical range: -45° ~ +45°).
8	Tilt Axis Motor	Used to control the moving range of the gimbal to rotate up or down (mechanical range of Fusion 4T V2: -135° ~ +45°; and mechanical range of Fusion 4N V2: -135° ~ +55°; mechanical range of Fusion 4NZ-L V2: -135° ~ +50°. Controllable range: -90° ~ +30°.

3.9.1 Gimbal Mechanical Range

The mechanical ranges of the tilt, pan, and roll axes of the gimbal are shown below.

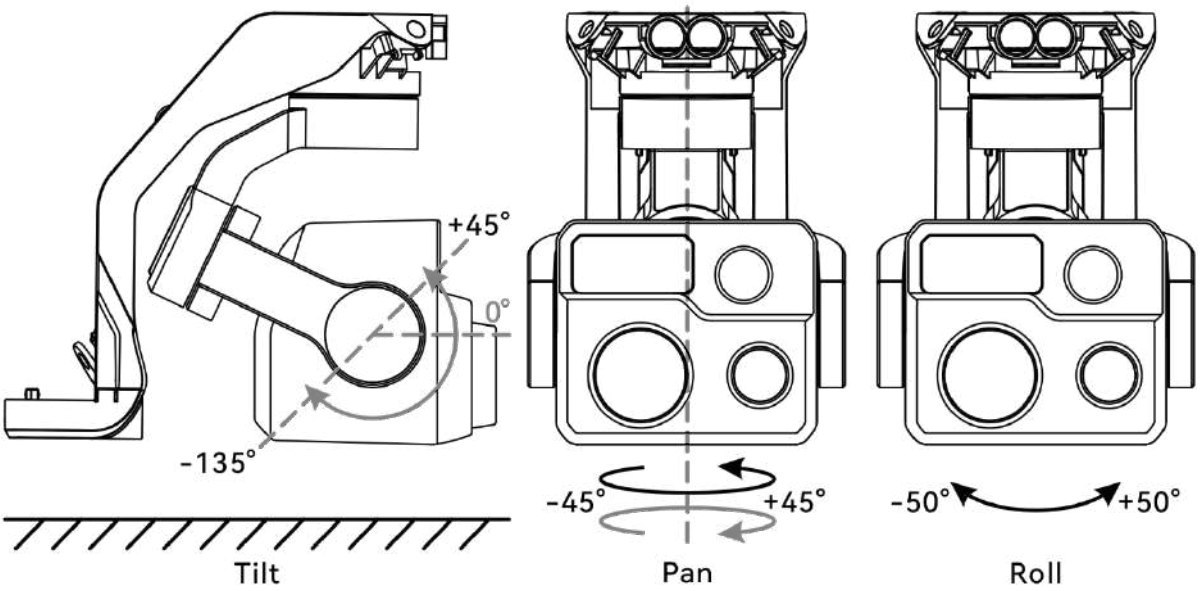

Fig 3-12 Three-axis description of the Gimbal (Fusion 4T V2 gimbal)

Table 3-9 Mechanical Range of the Gimbal

Gimbal	Tilt axis	Pan axis	Roll axis
Fusion 4T V2	-135° ~ +45°	-45° ~ +45°	-50° ~ +50°
Fusion 4N V2	-135° ~ +55°	-45° ~ +45°	-50° ~ +50°
Fusion 4NZ-L V2	-135° ~ +50°	-45° ~ +45°	-50° ~ +50°

Remark

- The controllable range of the gimbal is the pitch axis: -90°~+30°. For more setting details, see "6.5 "Settings" Interface" in Chapter 6.

3.9.2 Gimbal Operations

■ Control Gimbal by RC Functional Buttons

- Left dial wheel: Used to adjust the gimbal pitch. Turn left to rotate the gimbal down, and turn right to rotate the gimbal up.
- Custom keys C1/C2: After setting the C1 or C2 key to "Gimbal Pitch Recenter/45°/Down", you can press the key to switch the gimbal angle.

Tip

- For the control operations of the remote controller, see "4.1.1 Remote Controller Components" and "4.11.1 Custom Keys C1 and C2" in Chapter 4.

■ Control Gimbal in the Flight Application

For the gimbal control operations in the flight application, see "6.8.1 Camera Function Access" in Chapter 6.

Warning

- When the drone is not in use, especially when the drone is being transferred or stored, be sure to use the protective cover of the gimbal to fix the gimbal, so as to avoid damage to the gimbal due to accidental rotation or bumping.
- Please remove the protective cover of the gimbal before turning on the drone, otherwise, it may cause damage to the gimbal motor and related circuit.
- When turning on the power switch of the drone, the gimbal will automatically rotate to perform self-check and calibration, please make sure there is no object near the gimbal to hinder its movement.

3.9.3 Replacing the Gimbal

The drone adopts removable gimbal design, allowing users to easily replace the gimbal with one of different model to meet your flight needs in various scenarios.

Important

- Please follow the instructions below to replace the gimbal, as improper replacement may cause damage to the gimbal or poor contact with the gimbal port.
- Do not replace the gimbal frequently. The gimbal connector is a precision element, and frequent plugging and unplugging may result in poor contact between the drone and the gimbal.
- Please use the gimbal model specified by Autel Robotics for replacement. Incompatible gimbals may cause damage to the drone.

⚠ Warning

- Do not attempt to remove or mount the gimbal when it is powered on. Wait for 15 seconds after powering off the drone (the internal capacitor is fully discharged) before removing or mounting the gimbal.
- When turning the drone upside down to remove or mount the gimbal, please protect the visual obstacle avoidance lens and strobe at the back of the drone fuselage to avoid scratches.
- If there is a function mount installed on the Extension Port, please remove the mount before removing or installing the gimbal, so as to prevent the mount from being damaged.

■ Removing the Gimbal

1. Press and hold the power button of the drone for 3 seconds to turn it off and remove the smart battery.
2. Place the drone on a level surface with the bottom of the fuselage facing up.
3. Use a Phillips PH00 screwdriver to loosen the two anti-loosening screws securing the connector cover.
4. Slightly lift the connector cover and slide it back and up to take out the gimbal.

⚠ Warning

- When removing the gimbal, do not forcefully pull the gimbal out, as this may cause damage to the gimbal. You should hold the gimbal dampener mount to remove the gimbal.

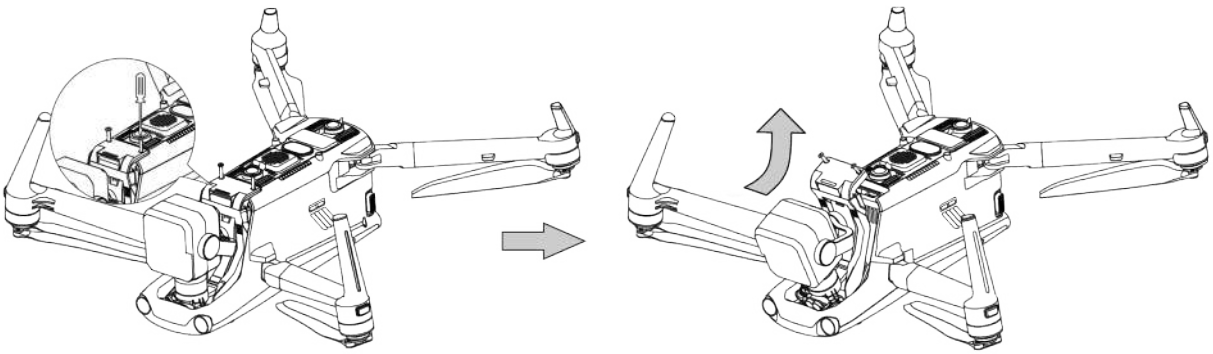

Fig 3-13 Removing the Gimbal

■ Mounting the Gimbal

1. Press and hold the power button of the drone for 3 seconds to turn the drone off and remove the smart battery.
2. After aligning the cylindrical hole on the front end of the gimbal dampener mount with the two fixed pins in the drone nose gimbal compartment, push and slide the gimbal forward until the connector cover is aligned with the connector slot in the drone.
3. Gently push down the connector cover to the bottom, so that the connector under the connector cover is inserted into the connector slot, and the connector cover needs to be flush with the bottom of the drone.

4. Use a Phillips PH00 screwdriver to partially tighten the two anti-loosening screws into the two fixing holes on the connector cover. After ensuring that the connector is perfectly aligned with the connector slot, fully tighten the two anti-loosening screws to secure the connector cover.
5. Place the drone on level ground, unfold the arms, and press and hold the power button for 3 seconds to power on the drone. If the connector cable of the gimbal is connected correctly, the gimbal will automatically rotate the camera to perform a self-test.

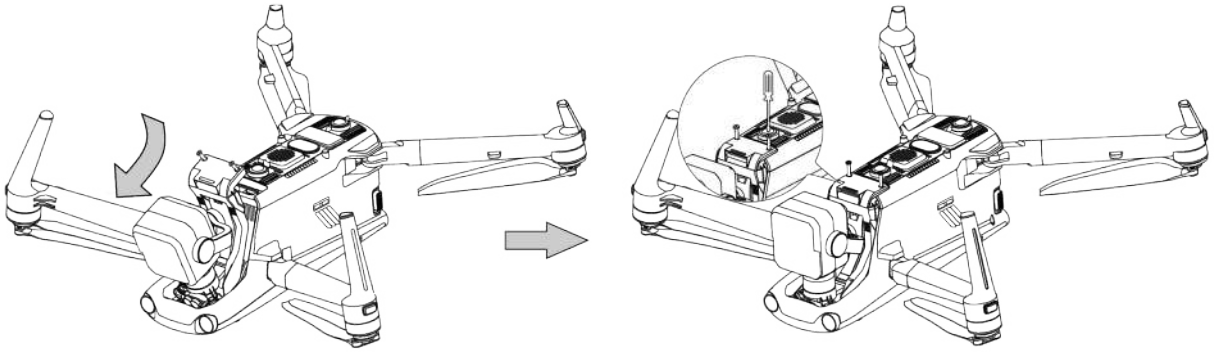

Fig 3-14 Mounting the Gimbal

Important

- Please make sure that the connector cover of the gimbal is aligned with the connector slot at the bottom of the fuselage, otherwise, it will affect the connection between the gimbal and the drone.

Warning

- After mounting the gimbal to the drone, please make sure that all parts are fully fixed to avoid loss due to functional failures caused by loose assembly of the gimbal during flight.

3.10 Flight Control System

The drone achieves stable and convenient flight control through its built-in intelligent flight control system. The system supports a number of advanced functions, including auto-return, failsafe, and visual positioning system.

Table 3-10 Flight Control System

Module	Description
IMU	A three-axis gyroscope and a three-axis accelerometer measure acceleration and angular velocity.
Compass (Magnetometer)	Measures the geomagnetic field and provides reference information on the drone heading.
GNSS Receiver	Receives global satellite navigation signals to measure longitude, latitude, and altitude.

Barometer	Measures atmospheric pressure and is used to determine the altitude of the drone.
Visual Obstacle Avoidance Sensing System	Provides the drone with 720° obstacle avoidance sensing capability around the drone.
Millimeter Wave Radar	Provides the drone with all-day and all-weather obstacle avoidance sensing capability.

3.10.1 Flight Status

Depending on the availability of GNSS signals and flight conditions, the drone can automatically switch between the following three modes. Users can check the flight status of the drone in the status notification bar in the flight application. For details, please refer to "6.3 Status Notification Bar" in chapter 6.

Table 3-11 Flight Status

Mode	Description
GNSS Mode	When the drone detects a qualified GNSS signal, it will enter the GNSS mode automatically. In GNSS mode, if the obstacle avoidance system is turned on, the system will provide auxiliary information to more accurately locate and avoid obstacles, provide stable and smooth flight control, and support auto-return, failsafe, geofencing and other safety functions.
Visual Positioning Mode	When the drone is in the visual positioning mode, and the GNSS signal detected is not strong enough to activate GNSS mode, and it meets certain environmental and altitude requirements (The ambient light intensity is greater than 15Lux, the ground texture is clear, the diffuse reflectance is greater than 20%, and the UAV flight altitude is within the observation range of the visual obstacle avoidance perception system), the drone will automatically enter the visual positioning mode.
Attitude Mode	When there is no GNSS signal and the environment and altitude cannot meet the minimum requirements of the visual obstacle avoidance sensing system, that is, when there is no GNSS signal and visual positioning failure at the same time, the attitude mode will be activated. In this mode, the obstacle avoidance system is disabled, and the drone only controls the altitude through the barometer, and users are supposed to make their own decisions to ensure flight safety.

⚠ Warning

- If you have not fully mastered the flight control of the drone and the drone is in attitude mode, please do not take off rashly.

- If the drone is in visual positioning mode or attitude mode, the no-fly zone function of the geofencing system will be unavailable and please be cautious that do not enter restricted airspace.

3.10.2 Flight Modes

The drone has varying flight power output performance in different flight modes. You can set the flight mode of the drone in the flight application. For more information, see "6.3 Status Notification Bar" and "6.5 "Settings" Interface" in Chapter 6.

Table 3-12 Flight Modes

Flight Modes	Description
Slow	Forward, backward, left, and right: 2.5 m/s; Ascend: 2.5 m/s; Descend: 2.5 m/s.
Smooth	Forward, backward, left, and right: 10 m/s; Ascend: 3 m/s; Descend: 3 m/s.
Standard	Forward and backward: 15 m/s; Left and right: 10 m/s; Ascend: 6 m/s; Descend: 6 m/s.
Ludicrous	Forward: 23 m/s; Backward: 18 m/s; Left and right: 20 m/s; Ascend: 8 m/s; Descend: 6 m/s.

⚠ Warning

- If you have not fully mastered the flight control of the drone, it is not recommended for you to switch to Ludicrous mode.
- When flying close to the ground, it is recommended to switch to Slow mode for safety.
- When switching to Ludicrous mode, the obstacle avoidance function of the drone will become unavailable, and the drone will not automatically avoid surrounding obstacles during flight. Please always pay attention to the surrounding environment when using it, and manually control the drone to avoid obstacles.
- When switching to Ludicrous mode, its flight speed is greatly improved compared with Standard mode, so the safety distance in this mode will be correspondingly extended. Users should maintain the safety distance of at least 50 meters when operating the drone manually in this mode to ensure personal and flight safety.

3.10.3 Intelligent Flight Function

■ Accurate Landing

The accurate landing function uses the downward binocular visual obstacle avoidance lens group of the drone to record the information at its take-off point. When the drone is returning to the home point or landing, vision algorithms are used to calculate the distance between the drone and the take-off point in real time so as to make sure that the drone successfully lands at the take-off point.

■ Landing Protection

The landing protection function uses the downward visual obstacle avoidance lens group and downward millimeter-wave radar of the drone to create a depth map, then calculate the flatness and angle of the depth map to detect whether the surface is flat enough for a safe landing.

■ Intelligent Obstacle Avoidance

The intelligent obstacle avoidance function uses the combined observation results of the visual obstacle avoidance sensing system and the forward millimeter-wave radar sensing system of the drone to calculate the optimal flight path, achieving obstacle avoidance in multiple directions.

Important

- If there is no home point set, the drone will record the takeoff point as the default home point. When the home point is not refreshed in flight, the precise landing will initiate.
- When the precise landing function is enabled, users should ensure the takeoff environment does not change.

3.10.4 Hot Swap Battery

The drone supports hot-swappable batteries, which allows you to replace smart batteries without powering off the drone, thus avoiding waiting for rebooting. When performing a hot swap, it is recommended to replace the battery within 8 seconds to ensure that the new battery can be properly activated when powering on the drone.

Important

- Before performing a hot swap, please enable the "Hot Swap Battery" function in the flight application. For more information, see “6.5 “Settings” Interface” in Chapter 6.
- After you remove the battery during a hot swap, the drone will enter low power mode. In this mode, the drone is powered by its internal supercapacitor. Therefore, you should complete the battery replacement quickly.
- The battery replacement time may vary under different temperatures. Please replace the battery within 8 seconds. If the replacement time exceeds 8 seconds, please reboot the drone. Hot swap operations in temperatures below -10℃ may fail.

3.11 Installing the microSD Card

The drone comes with a 64 GB microSD card (pre-installed in the microSD card slot of the drone at the factory). If you want to replace it with a higher-capacity microSD card, please refer to the following operations.

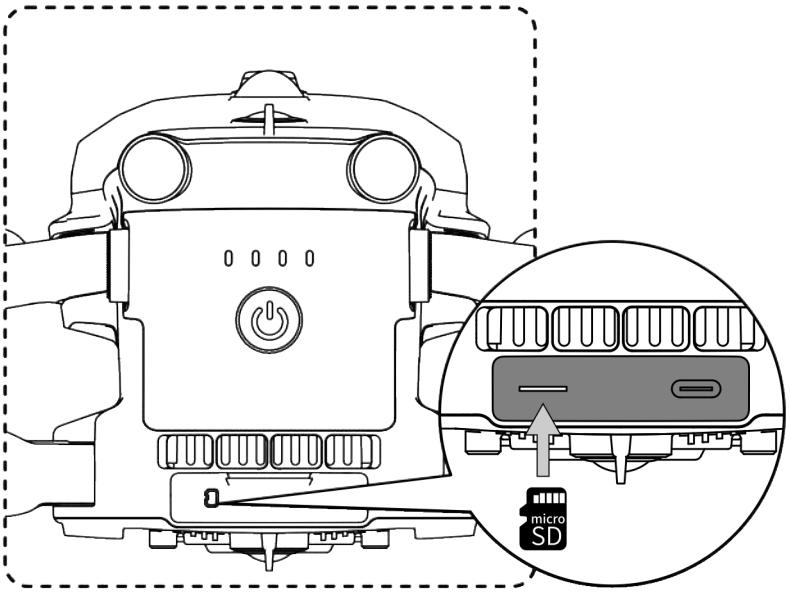

Fig 3-15 Installing the microSD Card

Tips

- The drone has built-in 128 GB storage space, with approximately 64 GB available due to storage of system firmware upgrade.
- It is recommended that you prioritize using an external microSD card for storing the image data collected during flight to avoid running out of internal storage space, which will affect the flight safety of the drone.
- If you plan to shoot high-definition videos, we recommend using a Class 10, UHS-3, or higher microSD card.

Warning

- To prevent data loss, please turn off the drone before removing the microSD card.
- After installing the microSD card, close the rubber protective cover over the port area promptly to avoid affecting the protective performance of the product.

3.12 Connecting to PC/MAC

To transfer photos and videos to a PC, MAC, or other devices, please use a data cable to connect to the device through the USB-C Port on the rear side of the drone.

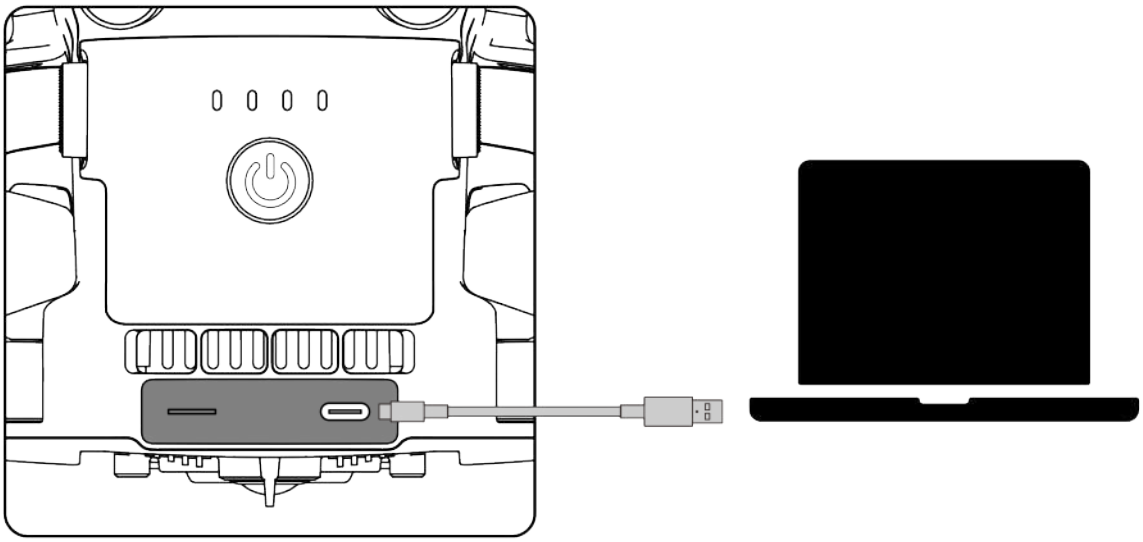

Fig 3-16 Connect to PC/MAC via Drone USB-C Port

3.13 Extension Port

The drone has a PSDK Port at its top, which uses the USB-C Port standard. The port allows for additional functional mounts such as the RTK module and speaker and spotlight system.

Important

- Mounts for the drone are sold separately. If you need a mount, contact Autel Robotics or third parties that have passed safety and compatibility certification test.
- Do not plug a device that uses other USB-C Port standards into the PSDK Port, as it may damage the drone.
- Before flight, make sure that the mount is securely connected to the drone and the fixing screws on both sides are tightened.
- Pay attention to the battery level of the drone during flight. Functional mount consumes the battery power of the drone, which will reduce the flight time of the drone.
- After removing a mount from the drone, be sure to close the rubber protective cover over the port area. Otherwise, the protective performance of the drone will be affected.

Table 3-13 Compatible Mount List

Mount Information	XRT-2301X RTK Module	DU4 Speaker and Spotlight System
Part Number (EAN)	6924991127222	6924991124795
Part Number (UPC)	889520207225	889520204798
Manufacturer	Autel Robotics	JZ Technology
Maximum Mount Dimension	72×48×45 mm	145×117×83 mm
Maximum Mount Weight	29 g	195 g

Functional Compatibility Requirements	The current firmware version does not support this mount yet.	Drone firmware version: V1.9.1.125 Remote controller version: V1.9.1.117 Flight application version: V2.4.54

Tips

- Before using the above mount in the drone, make sure that the drone, the remote controller, and the flight application meet the functional compatibility requirements. If you use versions below those specified in the above requirements, the related functions cannot be enabled.
- When the drone is fully charged and is working with a payload, the hovering time will be reduced, but other aspects will not be affected.

3.14 Noise Description

The drone will generate a certain level of noise during operation. You should understand local noise pollution prevention regulations in advance and set an appropriate flight altitude or safe distance to ensure that it does not disturb other individuals, groups, or organizations.

■ A-weighted sound power level

The drone has passed the sound power test conducted by relevant third-party testing organizations with qualification. The results comply with the regulations concerning unmanned aerial vehicles in the European Union.

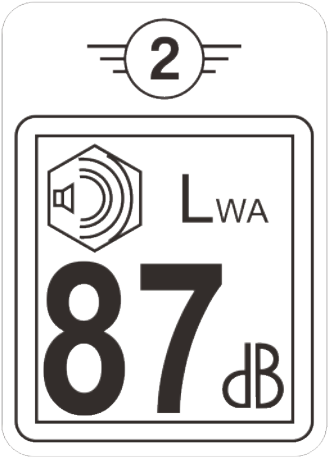

Fig 3-17 A-weighted sound power level of the drone

■ A-weighted sound pressure level

Measurement results for the drone, in accordance with the requirements of GB 42590-2023 in Chinese mainland, are provided below:

Table 3-14 Noise Measurements Results (normalized to 1 m from the drone)

Observation Points	Hover	Fly (1 m/s)
Ground Measure Point (Below)	71.5dB	75.8dB
Side Measure Point (Horizontal Plane)	73.7dB	71.7dB

Note: The measurement environment is an outdoor cement ground.

Tip

- Before flight, please make sure to verify the noise restrictions in the flying area in advance to avoid any violation of local regulations regarding drone noise.

3.15 Drone Communication Frequency Bands

The drone is equipped with Autel SkyLink 3.0 Video Transmission technology and has 4 Video Transmission antennas, with 2 channels of transmitting signals and 4 channels of receiving signals, so that the communication distance between the drone and the ground control station can reach up to 15 kilometers.

- It supports adaptive frequency hopping transmission of multiple frequency bands, selects the optimal channel according to the electromagnetic interference situation, and has strong anti-interference ability.
- The quality of real-time transmission reaches 1080p@30fps, and it has a high transmission bit rate of 64Mbps and low-latency transmission characteristics.
- Both data link path transmission and data storage adopt the AES-256 encryption method to ensure the communication data security between end-to-end.

Remarks

- The transmission data is based on the ground control station and comes from test data, and the test environment and conditions are different, and the data may be different.
- The transmission range is for reference only. During use, please pay close attention to the quality of the remote controller signal. When the remote controller signal is weak, reduce the flight radius in a timely manner. For more information, see "6.3 Status Notification Bar" in Chapter 6.

Tips

- In actual use, after the drone and the remote controller is turned on and matched in frequency, the flight application in the remote controller will automatically determine and select the radio communication frequency band that complies with local regulations for the specific country or region based on the GNSS information received by the drone.

- Before flight, please ensure that the drone receives a strong GNSS signal after being powered on. This allows the flight application to receive the proper communication frequency band.
- When the drone does not obtain GNSS positioning information after being turned on (for example, the drone enters visual positioning mode or attitude mode right after being turned on), the radio communication frequency band between the RC and the drone adopts 2.4G frequency band by default; when the drone enters the visual positioning mode or attitude mode from GNSS mode, its communication frequency band remains the same.

■ Information of Video Transmission Frequency Bands for Drone

The Video Transmission frequency bands of the drone comply with regulatory requirements worldwide. The relevant used frequency bands are listed in the table below.

Tip

- Users can select legal Video Transmission frequency bands in the flight application. For details, please refer to "6.5 "Settings" Interface" in chapter 6.

Table 3-15 Drone Global Frequency Bands Used (Video Transmission)

Operating Frequency	Details	Countries and Regions
900M	902-928MHz	■ USA (FCC) ■ Canada (ISED)
2.4G	2400–2476MHz	■ Chinese Mainland (SRRC)
2.4G	2400–2483.5MHz	■ USA (FCC) ■ Canada (ISED) ■ EU (CE) ■ UK (UKCA)
5.2G	5150-5250MHz	■ USA (FCC) ■ EU (Except Germany, CE) ■ UK (UKCA)
5.2G	5170-5250MHz	■ Germany (CE)
5.8G	5725-5829MHz	■ Chinese Mainland (SRRC)
5.8G	5725-5850MHz	■ USA (FCC) ■ Canada (ISED) ■ EU (CE) ■ UK (UKCA)

■ Information of Wi-Fi Frequency Bands for Drone

The drone supports the Wi-Fi Super Download feature. After the drone lands, it will automatically activate Wi-Fi. Other mobile devices can quickly transfer and download photos and video files captured by the drone by connecting to the drone's Wi-Fi.

Remarks

- The drone is equipped with the hardware at the factory for the Wi-Fi Super Download feature. This feature will be available in future firmware upgrade. Please upgrade accordingly when the feature is available.

The Wi-Fi frequency bands of the drone comply with regulatory requirements worldwide. The relevant used frequency bands are listed in the table below.

Table 3-16 Global Frequency Bands Used (Wi-Fi)

Operating Frequency	Details	Countries & Regions
2.4G (2400–2476MHz)	802.11b/g/n/ax	■ Chinese Mainland (SRRC)
2.4G (2400–2483.5MHz)	802.11b/g/n/ax	■ USA (FCC) ■ Canada (ISED) ■ EU (CE) ■ UK (UKCA)
5.2G (5150–5250MHz)	802.11a/n/ax	■ USA (FCC) ■ EU (Except Germany, CE) ■ UK (UKCA)
5.2G (5170-5250MHz)	802.11a/n/ax	■ Germany (CE)
5.8G (5725–5829MHz)	802.11a/n/ax	■ Chinese Mainland (SRRC)
5.8G (5725–5850MHz)	802.11a/n/ax	■ USA (FCC) ■ Canada (ISED) ■ EU (CE) ■ UK (UKCA)

Remarks

- Some countries and regions have strict restrictions on the use of radio communication frequency bands. It is crucial to use them legally, and any modification of communication modules is strictly prohibited.
- In Germany there’s specific requirements for the 5.2G frequency band. Unmanned aerial systems are only allowed to use the frequency within the range of 5170MHz to 5250MHz.

- If flying in any countries not listed in the above table, please consult the local communication management authorities to ensure that the drone communication frequency bands comply with local regulatory requirements.
- The drone will automatically match the legal frequency band based on GNSS positioning, so users can use it with confidence.

■ RC Devices

In addition to the remote controller, the drone also supports matching with the EVO Nest for remote communication control over the drone.

Table 3-17 Remote Control Device Support List

Control Device Information	Autel Smart Controller V3
Part Number (EAN)	6924991129011
Part Number (UPC)	889520209014
Manufacturer	Autel Robotics
Flight Application	Autel Enterprise
Version Requirement	V1.9.1.117 or higher
Supplementary Information	Standard configuration

Tips

- The remote controller is a standard accessory in the drone package, and Autel Robotics also provides retail packages to choose separately.
- When using the remote controller to remotely control the drone, make sure that the application version meets the above requirements.

Chapter 4 Remote Controller

4.1 Introduction

The remote controller is installed with the flight application Autel Enterprise by default, allowing you to operate and set the drone and the gimbal and transmit high-definition videos from the gimbal camera in real time. It offers a maximum communication distance of 15 kilometers.

Remarks

- The maximum communication distance of the remote controller is measured under unblocked and interference-free conditions and is for references only.
- It supports adaptive frequency hopping transmission, selects the optimal channel according to the electromagnetic interference situation, and has strong anti-interference ability.
- Both data link path transmission and data storage between the drone and the remote controller adopt the AES-256 encryption method to ensure the communication data security between end-to-end.

4.1.1 Remote Controller Components

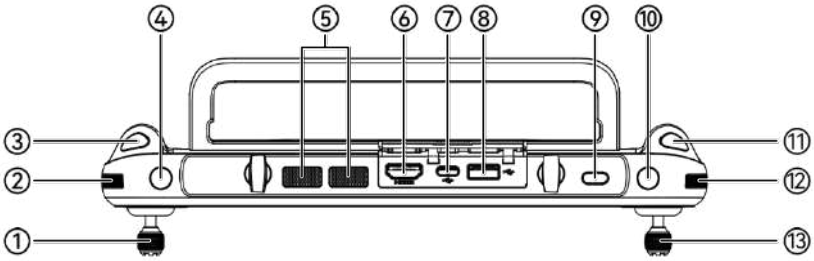

Fig 4-1 Remote Controller Top-Down View

Table 4-1 Remote Controller Top-Down View Details

No.	Name	Description
1	Left Command Stick	Controls the state of motion of the drone. The default stick mode is Mode 2. In this mode, you can use the stick to control the ascent, descent, and heading of the drone. You can set the stick mode in the flight application. For more information, see "6.5 "Settings" Interface" in Chapter 6.
2	Left Dial Wheel	Turn the dial wheel to adjust the gimbal pitch.
3	Video Recording Button	Press the button to start recording video and press it again to end recording video.
4	Key C1	Customize the key function in the flight application. For more information, see "6.5 "Settings" Interface" in Chapter 6.

5	Air Outlet	For heat dissipation of the remote controller. When using it, please pay attention to whether there are foreign objects blocking the air outlet.
6	HDMI Port	Outputs the live view of the remote controller to a supported display device.
7	USB-C Port	Used for remote controller charging or device debugging.
8	USB-A Port	Connects to an expandable 4G/5G module or external USB device for data transmission.
9	Power Button	When the remote controller is off, press this button for 1 second to display the remaining battery level of the RC and press this button for 3 seconds to turn it on. When the remote controller is on, press this button quickly to switch between Screen On and Screen Off and press and hold it for 6 seconds to force shut the RC down.
10	Key C2	Customize the key function in the flight application. For more information, see "6.5 "Settings" Interface" in Chapter 6.
11	Shooting Button	Press the button to take a photo.
12	Right Dial Wheel	Turn the dial wheel to adjust the zoom factor of the camera.
13	Right Stick	Controls the state of motion of the drone. The default stick mode is Mode 2. In this mode, you can use the stick to control the translation of the drone in four directions: front/back/left/right. You can set the stick mode in the flight application. For more information, see "6.5 "Settings" Interface" in Chapter 6.

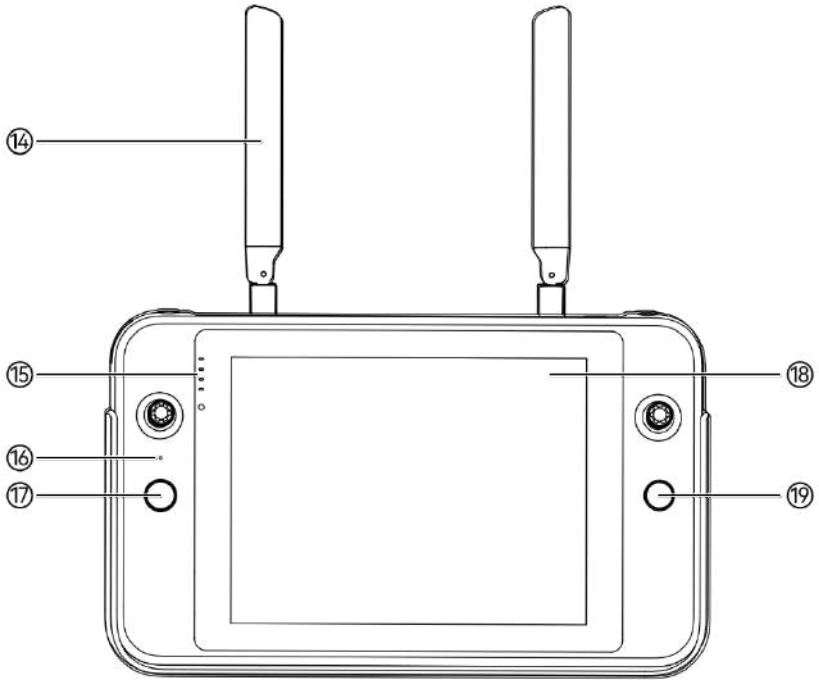

Fig 4-2 Remote Controller Front View

Table 4-2 Remote Controller Front View Details

No.	Name	Description
14	Antenna	Transmits the control signals of the remote controller to the drone and receives the Video Transmission information from the drone.
15	Battery Level Indicator	Displays the remaining battery level of the remote controller.
16	Audio Input	Receives information from an external audio source near the remote controller.
17	Take-off/Return-to-Home Button	When the drone is powered on but not yet taken off, long-press the button for 2 seconds, and the drone will take off and hover at the set hovering height, which is 1.2 meters above the ground by default. When the drone is flying, press and hold the button for 2 seconds, and the drone will automatically begin the return-to-home process. For details, please refer to "4.11.2 Take-off/Return-to-Home Button and Pause Button" in this chapter.
18	Display	Displays real-time Video Transmission views. with 2048×1536 resolution. Touch operation is supported.
19	Pause Button	When the drone is in autonomous flight, short press this button to control the drone to suspend autonomous flight and hover in place and press the button again to resume flight;

press and hold this button for 2 seconds to control the drone to exit the autonomous flight.

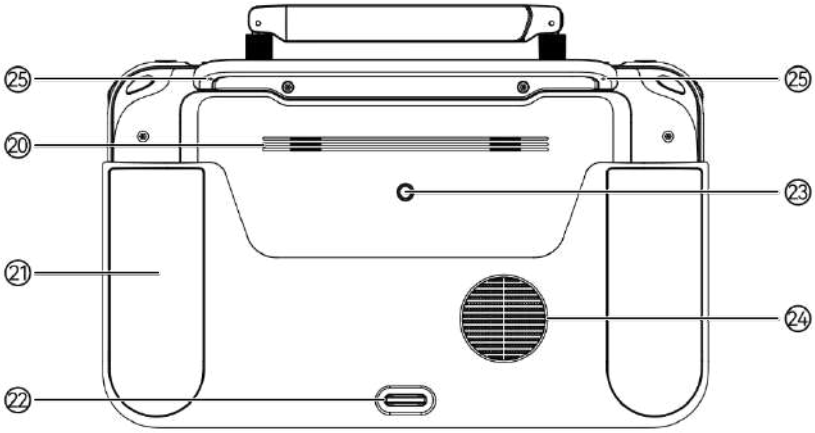

Fig 4-3 Remote Controller Rear View

Table 4-3 Remote Controller Rear View Details

No.	Name	Description
20	Speaker	Plays sound to indicate the status of the device.
21	Protective Cover	Used to prevent external damage such as collision and abrasion to the remote controller.
22	Lower Hook	Used to connect and fix the remote controller strap.
23	Standard 1/4 interface	Used for attaching tripods.
24	Air Inlet	Used for heat dissipation of the remote controller. Please pay attention to whether there are foreign objects blocking the air inlet when using it.
25	Stick Storage Slot	Used to store left and right sticks.

4.1.2 Communication Frequency Bands

The Video Transmission frequency bands of the remote controller comply with regulatory requirements worldwide. Please refer to the table below for the relevant used frequency bands.

Tips

- In actual use, after the drone and the remote controller is turned on and matched in frequency, the flight application in the remote controller will automatically determine and select the radio communication frequency band that complies with local regulations for the specific country or region based on the GNSS information received by the drone.
- Users can select legal Video Transmission frequency bands. For details, please refer to "6.5 "Settings" Interface" in chapter 6.

- Before flight, please ensure that the drone receives a strong GNSS signal after being powered on. This allows the flight application to receive the proper communication frequency band.
- When the drone does not obtain GNSS positioning information after being turned on (for example, the drone enters visual positioning mode or attitude mode right after being turned on), the radio communication frequency band between the RC and the drone adopts 2.4G frequency band by default; when the drone enters the visual positioning mode or attitude mode from GNSS mode, its communication frequency band remains the same.

Table 4-4 Global Frequency Bands Used (Video Transmission)

Operating Frequency	Details	Countries & Regions
900M	902-928MHz	■ USA (FCC) ■ Canada (ISED)
2.4G	2400-2476MHz	■ Chinese Mainland (SRRC)
2.4G	2400-2483.5MHz	■ USA (FCC) ■ Canada (ISED) ■ EU (CE) ■ UK (UKCA)
5.8G	5725-5829MHz	■ Chinese Mainland (SRRC)
5.8G	5725-5850MHz	■ USA (FCC) ■ Canada (ISED) ■ EU (CE) ■ UK (UKCA)

Table 4-5 Global Frequency Bands Used (Wi-Fi)

Operating Frequency	Details	Countries & Regions
2.4G (2400-2476MHz)	802.11b/g/n	■ Chinese Mainland (SRRC)
2.4G (2400-2483.5MHz)	802.11b/g/n	■ USA (FCC) ■ Canada (ISED) ■ EU (CE) ■ UK (UKCA)
5.8G (5725-5829MHz)	802.11a/n/ac	■ Chinese Mainland (SRRC)
5.8G (5725-5850MHz)	802.11a/n/ac	■ USA (FCC) ■ Canada (ISED) ■ EU (CE) ■ UK (UKCA)

Remarks

- Some countries and regions have strict restrictions on the use of radio communication frequency bands. It is crucial to use them legally, and any modification of communication modules is strictly prohibited.
- If flying in any countries not listed in the above table, please consult the local communication management authorities to ensure that the drone communication frequency bands comply with local regulatory requirements.
- The drone will automatically match the legal frequency band based on GNSS positioning, so users can use it with confidence.

4.2 Installing the Remote Controller Lanyard

Tips

- The remote controller lanyard is an optional accessory. You can choose whether to install it as required.
- When holding the remote controller for a long-time during flight operations, we recommend that you install the remote controller lanyard to effectively reduce the pressure on your hands.

■ Steps

1. Clip the two metal clips on the lanyard to the narrow positions on both sides of the metal handle at the back of the controller.
2. Open the metal button of the lanyard, bypass the lower hook at the bottom of the back of the controller, and then fasten the metal button.
3. Wear the lanyard around your neck, as shown in the figure below, and adjust it to a suitable length.

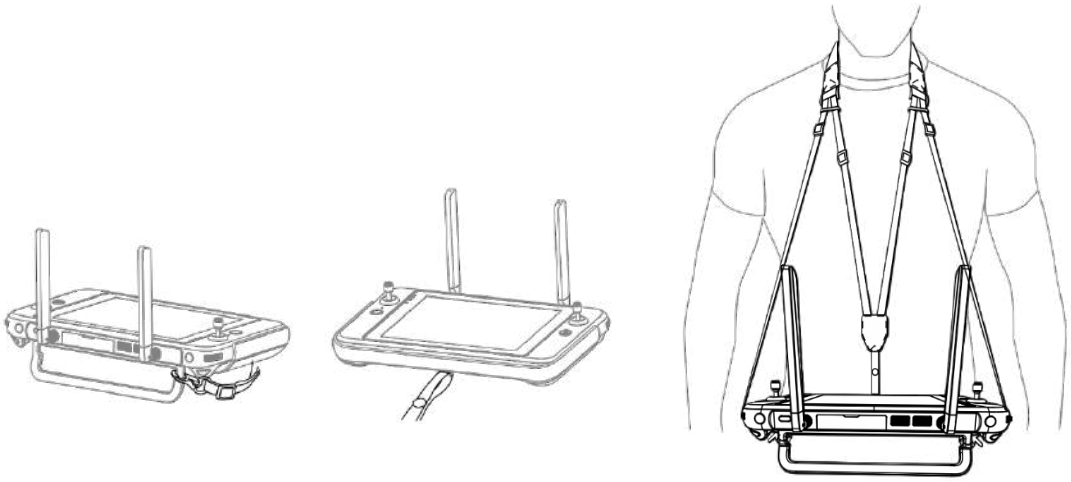

Fig 4-4 Install the Remote Controller Lanyard (As Required)

4.3 Installing/Storing Sticks

The remote controller features removable sticks, which effectively reduce storage space and enable easy carrying and transportation.

■ Installing sticks

There are stick storage slots above the mental handle at the back of the controller. Rotate counterclockwise to remove the two sticks and then rotate them clockwise to install them separately on the remote controller.

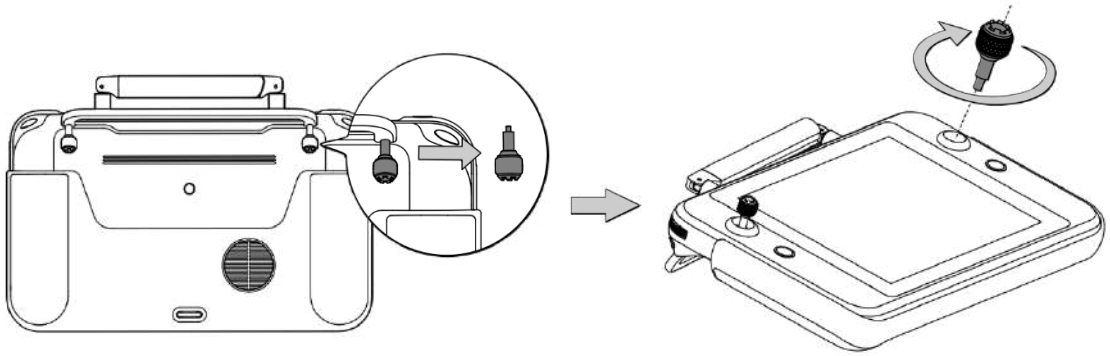

Fig 4-5 Installing sticks

■ Storing Sticks

Simply follow the reverse steps of the above operation.

Tip
● When the sticks are not in use (such as during transportation and temporary drone standby), we recommend that you remove and store them on the metal handle. This can prevent you from accidentally touching the sticks, causing damage to the sticks or unintended startup of the drone.

4.4 Turning the Remote Controller On/Off

■ Turning the Remote Controller On

Press and hold the power button at the top of the remote controller for 3 seconds until the controller emits a "beep" sound to turn it on.

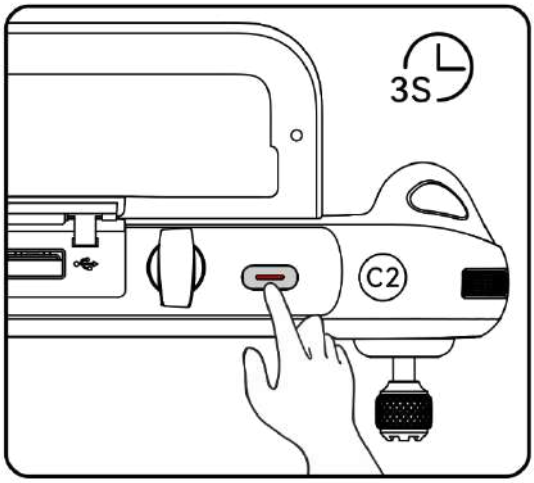

Fig 4-6 Turning the Remote Controller On

Tip

- When using a brand-new remote controller for the first time, please follow the on-screen instructions to complete the relevant setup.

■ Turning the Remote Controller Off

When the remote controller is on, press and hold the power button at the top of the remote controller until the "Off" or "Restart" icon appears at the top of the controller's screen. Tapping the "Off" icon will turn off the remote controller. Tapping the "Restart" icon will restart the remote controller.

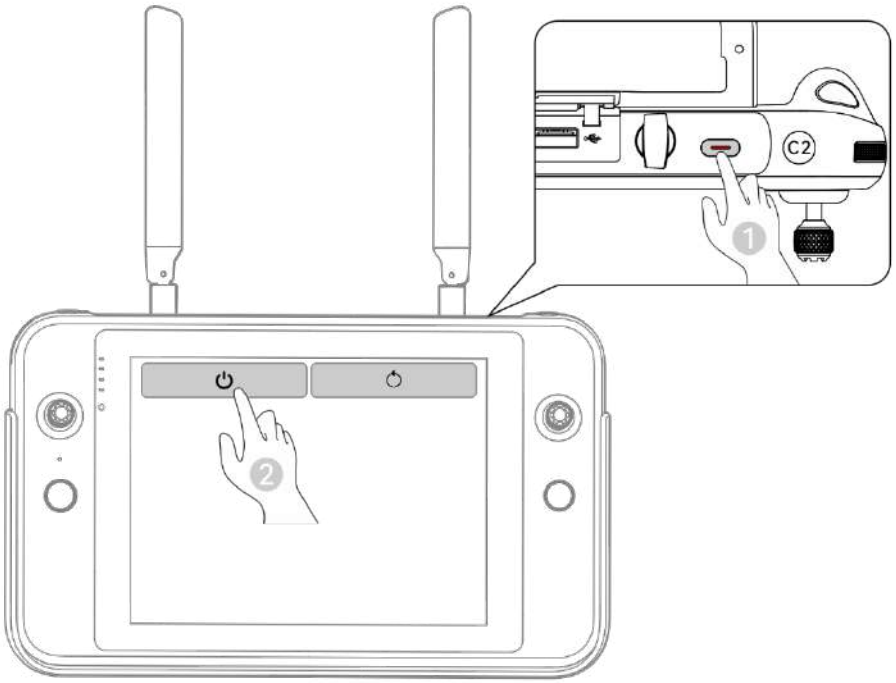

Fig 4-7 Turning the Remote Controller Off

Tip

- When the remote controller is on, you can press and hold the power button at the top of the remote controller for 6 seconds to forcibly turn it off.

4.5 Checking the Battery Level of the Remote Controller

When the remote controller is off, short press the power button of the remote controller for 1 second, and the battery level indicator will display the battery level of the remote controller.

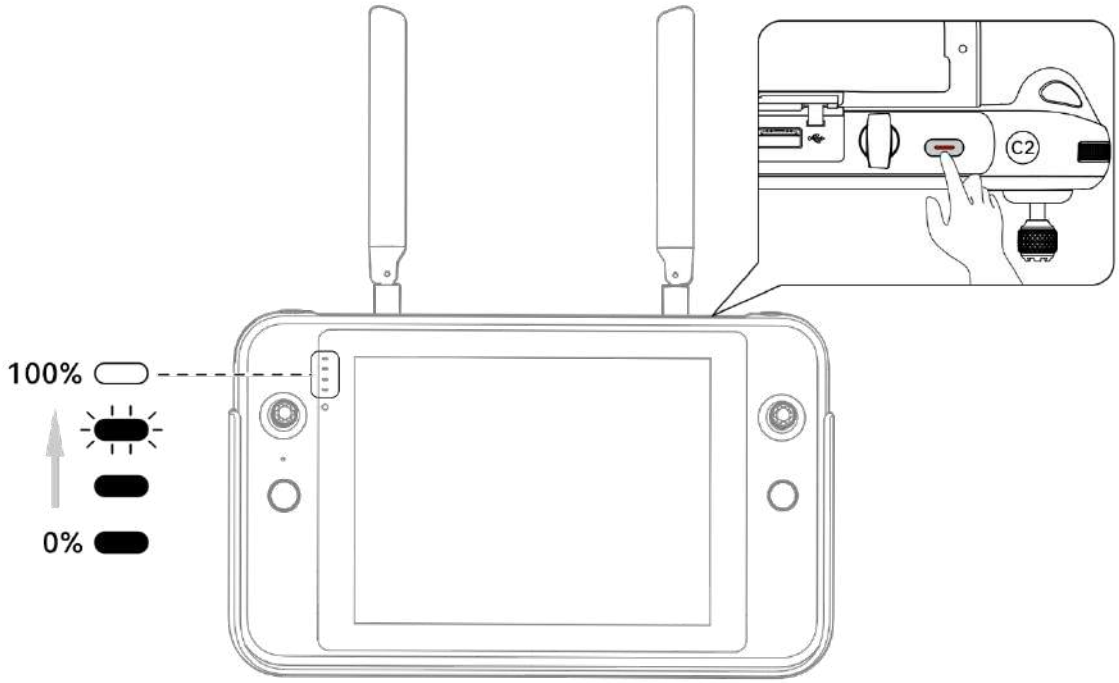

Fig 4-8 Checking the Battery Level of the Remote Controller

Table 4-6 Battery Remaining

Power Display	Definition	Power Display	Definition
	1 light always on: 0%-25% power		2 lights always on: 25%-50% power
	3 lights always on: 50%-75% power		4 lights always on: 75%-100% power

Tips

- When the remote controller is on, you can check the current battery level of the remote controller in the following ways:
  - Check it on the top status notification bar of the flight application.
  - Check it on the system status notification bar of the remote controller. In this case, you need to enable “Battery Percentage” in the “Battery” of the system settings in advance.
  - Go to the system settings of the remote controller and check the current battery level of the controller in “Battery”.

4.6 Charging the Remote Controller

Connect the output end of the official remote controller charger to the USB-C Port of the remote controller by using a USB-C to USB-A data cable or a USB-C to USB-C data cable and connect the plug of the charger to an AC power supply (100-240 V~ 50/60 Hz).

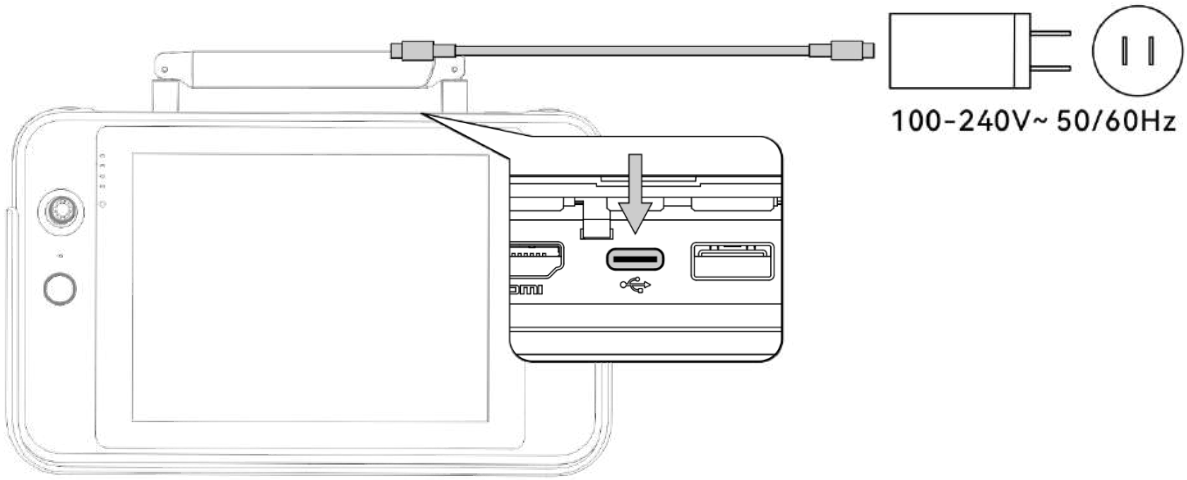

Fig 4-9 Use the remote controller charger to charge the remote controller

Tips

- If the remote controller is not used for a long time, please charge it every 3 months to prevent long-term low power from affecting battery life or damaging the battery.

Warning

- Please use the official charger provided by Autel Robotics or other chargers that support the PD 60W protocol to charge the remote controller. Using third-party chargers that do not meet the above requirements may damage the battery of the remote controller.
- After charging is complete, please disconnect the remote controller from the charger promptly.

Remarks

- It is recommended to fully charge the remote controller battery before the drone takes off.
- Generally, it takes about 120 minutes to fully charge the drone battery, but the charging time is related to the remaining battery level.

4.7 Adjusting the Antenna Position of the Remote Controller

During the flight, please extend the antenna of the remote controller and adjust it to an appropriate position. The strength of the signal received by the antenna varies depending on its position.
When the angle between the antenna and the back of the remote controller is 180° or 270°, and the plane of the antenna faces the drone, the signal quality between the remote controller and the drone can reach its best state.

Important

- When you operate the drone, make sure that the drone is in the place for the best communications.
- Do not use other communication devices of the same frequency band at the same time to prevent interference with the signals of the remote controller.
- During flight, if there is a poor signal between the drone and the remote controller, the remote controller will provide a prompt. Please adjust the antenna orientation according to the prompt to ensure that the drone is in the optimal data transmission range.
- Please make sure that the antenna of the remote controller is securely fastened. If the antenna becomes loose, please rotate the antenna clockwise until it is firmly fastened.

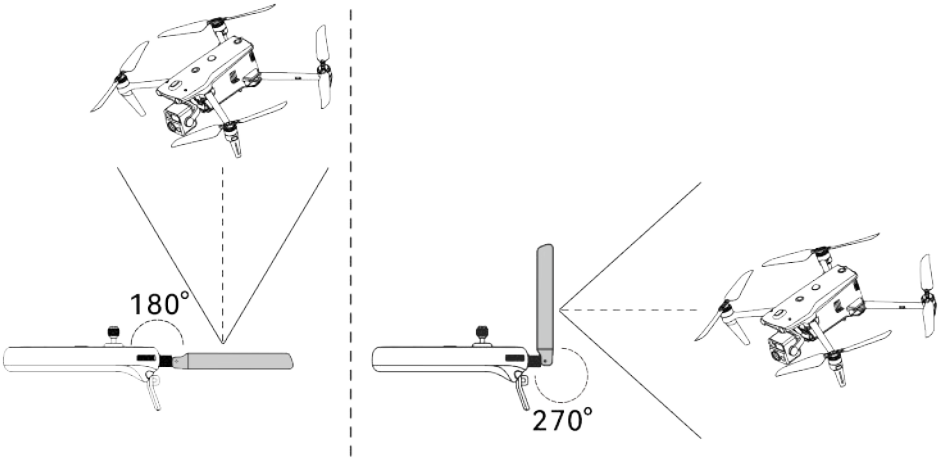

Fig 4-10 Extend the antenna

4.8 Remote Controller System Interfaces

4.8.1 Remote Controller Main Interface

After the remote controller is turned on, it enters the main interface of the flight application by default.
In the main interface of the flight application, slide down from the top of the touch screen or slide up from the bottom of the touch screen to display the system status notification bar and navigation keys, and tap the "Home" button or the "Back" button to enter the "Remote Controller Main Interface". Swipe left and right on the "Remote Controller Main Interface" to switch between different screens, and enter other applications as needed.

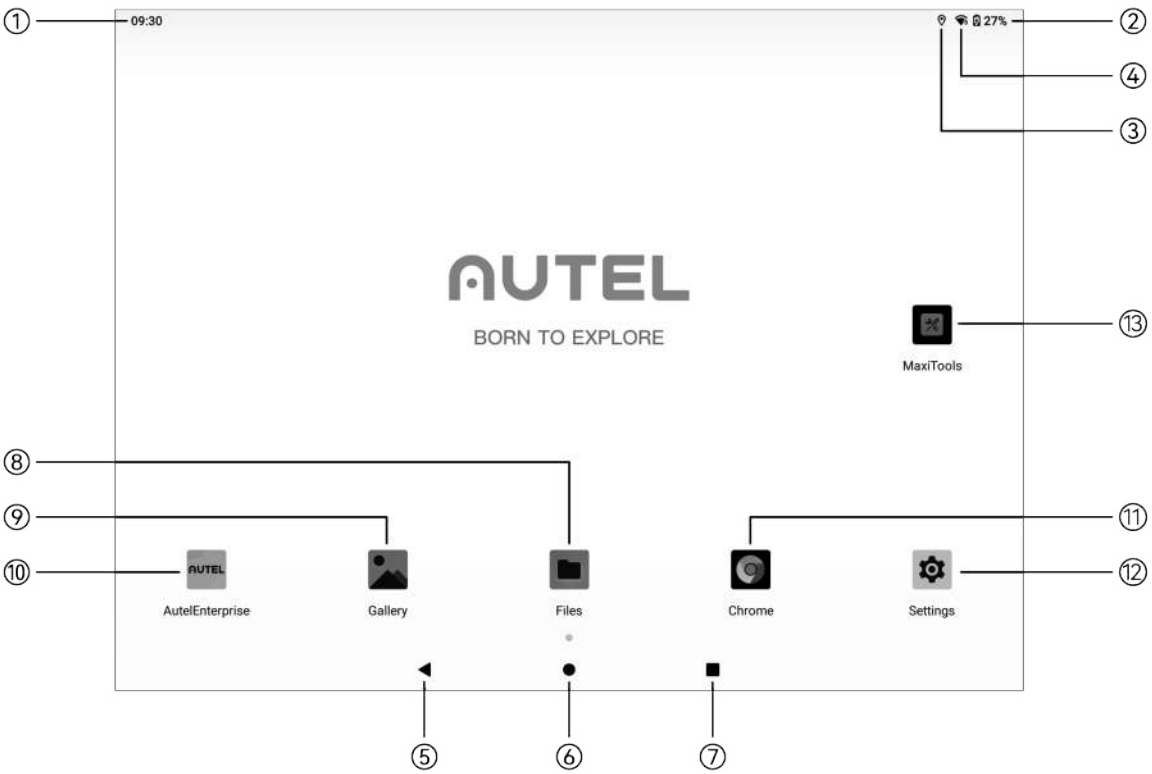

Fig 4-11 Remote Controller Main Interface

Table 4-7 Remote Controller Main Interface Details

No.	Name	Description
1	Time	Indicates the current system time.
2	Battery Status	Indicates the current battery status of the remote controller.
3	Location Info	Indicates that location information is currently enabled. If not enabled, the icon is not displayed. You can tap "Settings" to enter the "Location Information" interface to quickly turn on or off location information.
4	Wi-Fi Status	Indicates that Wi-Fi is currently connected. If not connected, the icon is not displayed. You can quickly turn on or off the connection to Wi-Fi by sliding down from anywhere on the "Remote Controller Interface" to enter the "Pull-Down Shortcut Menu".
5	Back Button	Tap the button to return to the previous page.
6	Home Button	Tap the button to jump to the "Remote Controller Main Interface".
7	“Recent apps” Button	Tap the button to view all background programs currently running and take screenshots.

		Press and hold the application to be closed and slide up to close the application. Select the interface where you want to take a screenshot, and tap the "Screenshot" button to print, transfer via Bluetooth, or edit the screenshot.
8	Files	The app is installed in the system by default. Tap it to manage the files saved in the current system.
9	Gallery	The app is installed in the system by default. Tap it to view the images saved by the current system.
10	Autel Enterprise	Flight application. The flight application starts by default when the remote controller is turned on. For more information, see "Chapter 6 Flight Application".
11	Chrome	Google Chrome. The app is installed in the system by default. When the remote controller is connected to the Internet, you can use it to browse web pages and access Internet resources.
12	Settings	The system settings app of the remote controller. Tap it to enter the settings function, and you can set the network, Bluetooth, applications and notifications, battery, display, sound, storage, location information, security, language, gestures, date and time, device Name, etc.
13	Maxitools	It supports the log function and can restore factory settings.

Tips

- The remote controller supports the installation of third-party Android apps, but you need to obtain the installation packages on your own.
- The remote controller has a screen aspect ratio of 4:3, and some third-party app interfaces may encounter compatibility issues.

Table 4-8 List of Pre-installed Apps on the Remote Controller

No.	Pre-installed App	Device Compatibility	Version	Operating System Version
1	Files	√	11	Android 11
2	Gallery	√	1.1.40030	Android 11
3	Autel Enterprise	√	V2.4.54	Android 11
4	Chrome	√	68.0.3440.70	Android 11
5	Settings	√	11	Android 11

6	Maxitools	√	2.45	Android 11

Tip

- Please be aware that the factory version of the flight application may vary depending on subsequent function upgrades.

4.8.2 Pull-Down Shortcut Menu

Slide down from anywhere on the "Remote Controller Interface", or slide down from the top of the screen in any app to display the system status notification bar, and then slide down again to bring up the “Pull-Down Shortcut Menu”.

In the "Pull-Down Shortcut Menu", you can quickly set Wi-Fi, Bluetooth, screenshot, screen recording, airplane mode, screen brightness, and remote controller sound.

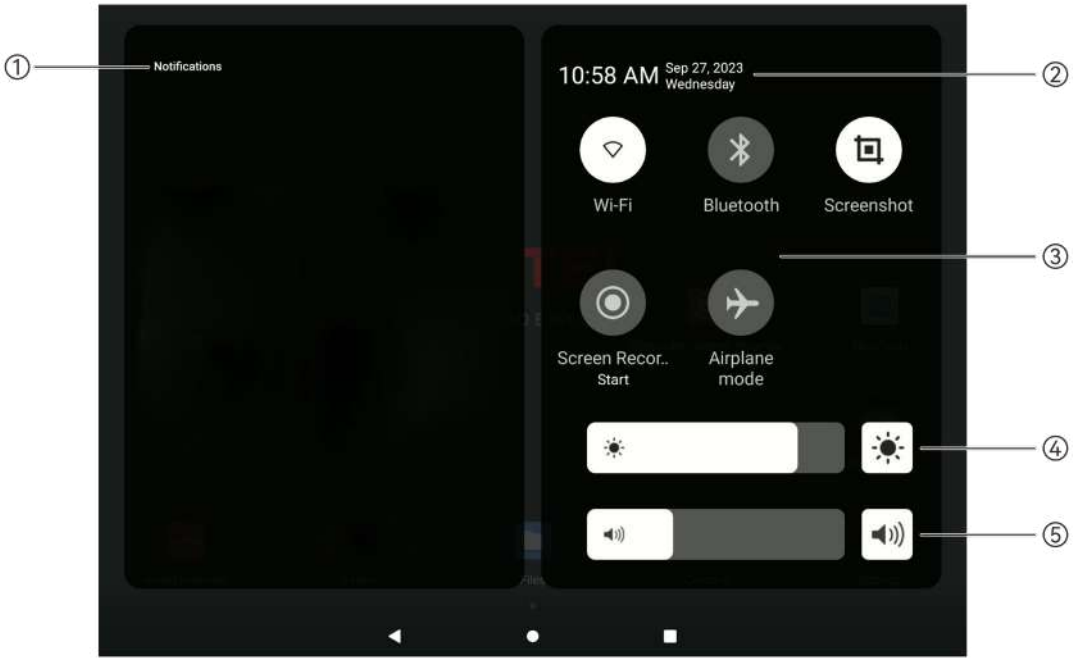

Fig 4-12 Pull-Down Shortcut Menu

Table 4-9 Pull-Down Shortcut Menu Details

No.	name	Description
1	Notification Center	Displays system or app notifications.
2	Time and Date	Displays the current system time, date, and week of the remote controller.
3	Wi-Fi	Tap the “ ” icon to enable or disable the Wi-Fi function. Press and hold it to enter WLAN settings and select the wireless network to be connected.

	Bluetooth	Tap the “” icon to enable or disable the Bluetooth function. Press and hold it to enter the Bluetooth settings and select the Bluetooth to be connected.
	Screenshot	Tap the “” icon to use the screenshot function, which will capture the current screen (hide the Pull-Down Shortcut Menu to take a screenshot).
	Screen Recor.. Start	After tapping on the “” icon, a dialog box will pop up, where you can choose whether to enable the functions of recording audio and displaying the touch screen position, and then tap the "Start" button, wait for 3 seconds, and start screen recording. Tap the icon again or tap “Screen Recorder” to turn off screen recording.
	Airplane mode	Tap the “” icon to turn on or off the airplane mode, that is, to turn on or turn off the Wi-Fi and Bluetooth functions at the same time.
4	Screen Brightness Adjustment	Drag the slider to adjust the screen brightness.
5	Volume Adjustment	Drag the slider to adjust the media volume.

4.9 Frequency Matching Between the Drone and the Remote Controller

Only after the remote controller and the drone are matched in frequency can users operate the drone using the remote controller.
The remote controller and the drone support two modes of matching: Single Link and A-Mesh Link. They differ in following aspects:

- Single Link: 1 RC matches with 1 drone in frequency.
- A-Mesh Link: It supports frequency matching between up to 2 RCs and 2 drones, which comprise a team.

Remarks

- The drone included in the drone kit has already been matched in frequency with the remote controller provided in the kit at the factory by using the Single Link. No matching is required after the drone is powered on. Normally, after completing the drone activation process, users can directly use the remote controller to operate the drone.
- If the drone and the remote controller become unmatched due to other reasons, please follow the above steps to match the drone with the remote controller in frequency again.

■ One RC Matches with One Drone when the RC is On

1. Turn on the RC and the drone.
2. After entering the main interface of the flight application, tap "" and then "" to enter the Single Link. At this time, the drone battery indicator enters the sync flashing status.
3. Double press the power button of the drone, and then the arm lights of the drone will turn green and flash quickly, waiting for the RC to complete auto matching.
4. After the drone is matched with the RC, the battery indicator and rear arm lights of the drone will stop flashing and the Video Transmission picture of the gimbal camera appears in the RC.

■ One RC Matches with One Drone when the RC is off (Force Match)

When the RC is off, users can force match the RC with the drone. The procedures are as follows:

1. Press and hold the power button and the take-off/return-to-home button of the remote controller at the same time until the battery level indicators of the remote controller blink quickly, which indicates that the remote controller has entered the forced frequency pairing state.
2. Make sure that the drone is turned on. Double-click the power button of the drone, and the front and rear arm lights of the drone will turn green and blink quickly.
3. When the rear arm lights of the drone and the battery level indicator of the remote controller stop blinking, it indicates that the frequency matching is successfully done.

■ A-Mesh Link

1. Choose one of those RCs and turn it on, and enter the main interface of its flight application, tap "" and then "" to enter "A-Mesh Link" interface, tap "Add device" button to enter A-Mesh Link mode. At this time the RC battery indicator blinks quickly.
2. Select one of those drones and turn it on, press its power button quickly and press and hold the button until the arm lights of the drone blink quickly (among which the rear arm lights turn yellow and blink quickly), which indicates that the drone enters the A-Mesh Link mode, waiting for the RC to complete auto frequency matching.
3. After the RC and the drone are matched in frequency successfully, the RC's battery level indicators blink quickly but the rear arm lights of the drone stop flashing, in "My team" interface RCs and drones in the team are displayed.
4. Users then can repeat the step 2 to add 1 more drone into the team; they can also choose another RC, enter the main interface of the flight application on the RC, tap "" and then "" to enter "A-Mesh Link" interface, tap "Join the team" button to enter A-Mesh Link mode and add the RC into the team.
5. After A-Mesh Link is completed, in the "My team" interface of the RC used in step 1, tap "Finish" button to complete the building of the team.

Tip

- The firmware of the smart battery should be V0.4.33.1 or later so that the A-Mesh Link can be supported. Otherwise, the matching cannot be triggered. When you use a smart battery with a version lower than that one, please connect the RC through Single Link, reboot the RC and the drone and update them by following instructions in the interface. After the update, please try the A-Mesh Link again.

Remarks

- In A-Mesh Link, the RC, which leads matching in the team, is the pilot role that has all control permissions over other drones in the team while the RC, which joins the team later, is the observer role that can only use pinpoint sharing operation and view screens of different lens of drones' gimbal cameras.
- In A-Mesh Link, the first drone that joins the team is the relay machine by default.
- After a team is built, in "My team" interface, the RC that has pilot role can dissolve the team or add device. The RC that has observer role can exit from the team.

Important

- When matching, please keep the remote controller and the drone close together, at most 1 meter apart.
- In frequency matching, please turn off Wi-Fi and Bluetooth of devices nearby which share same frequency bands. In this way, matching interference can be avoided.
- When matching multiple drones, please assign marks to devices and match them with RCs one by one so as to distinguish the devices easily.

4.10 Selecting Stick Mode

4.10.1 Stick Modes

When using the remote controller to operate the drone, you need to know the current stick mode of the remote controller and fly with caution.
Three stick modes are available, that is, Mode 1, Mode 2 (default), and Mode 3. Users can set stick mode based on their own needs or preference. For details about how to set the stick mode, please refer to "6.5 "Settings" Interface" in chapter 6.

■ **Mode 1**

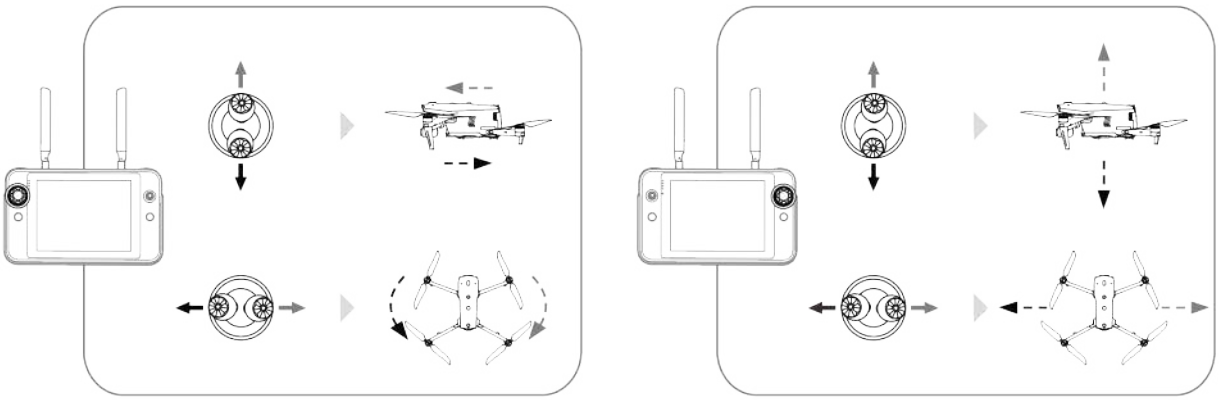

Fig 4-13 Mode 1

Table 4-10 Mode 1 Details

Stick	Move Up/Down	Move Left/Right
Left Stick	Controls the forward and backward movement of the drone	Controls the heading of the drone
Right Stick	Controls the ascent and descent of the drone	Controls the left or right movement of the drone

■ Mode 2

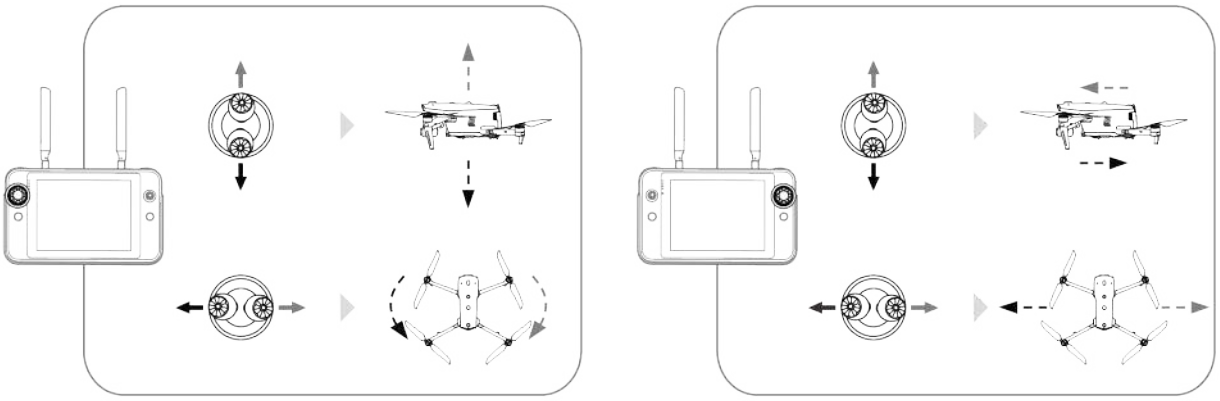

Fig 4-14 Mode 2

Table 4-11 Mode 2 Details

Stick	Move Up/Down	Move Left/Right
Left Stick	Controls the ascent and descent of the drone	Controls the heading of the drone
Right Stick	Controls the forward and backward movement of the drone	Controls the left or right movement of the drone

■ Mode 3

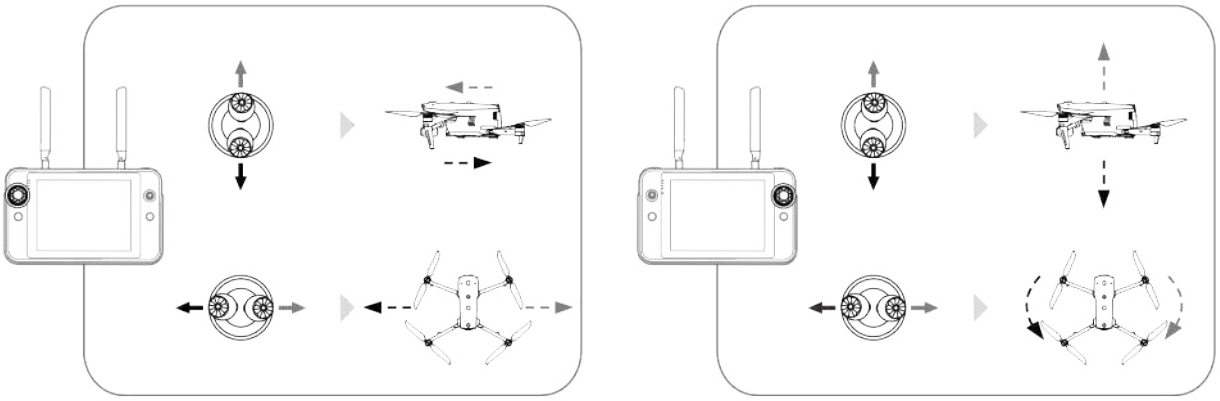

Fig 4-15 Mode 3

Table 4-12 Mode 3 Details

Stick	Move Up/Down	Move Left/Right
Left Stick	Controls the forward and backward movement of the drone	Controls the left or right movement of the drone
Right Stick	Controls the ascent and descent of the drone	Controls the heading of the drone

⚠ Warning

- Do not hand over the remote controller to people who have not learned how to use the remote controller.
- If you are operating the drone for the first time, please keep the force gentle when moving the sticks until you are familiar with the operation.
- The flight speed of the drone is proportional to the degree of the stick movement. When there are people or obstacles near the drone, please do not move the stick excessively.

4.10.2 Setting Stick Mode

The default stick mode of the remote controller is "Mode 2". The detailed setting instructions are as follows. You can also refer to following steps to set other stick mode of the RC.

Table 4-13 Default Control Mode (Mode 2)

Mode 2	Drone Flight Status	Control Method
Left Command Stick Move Up or Down 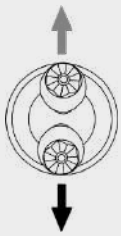	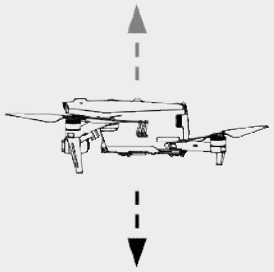	1. The up-and-down direction of the left stick is the throttle stick, which is used to control the vertical lift of the drone. 2. Push the stick up, and the drone will rise vertically; pull the stick down, and the drone will descend vertically. 3. When the stick is returned to the center, the altitude of the drone remains unchanged. 4. When the drone takes off, please push the stick up to above the center, and the drone can lift off the ground.
Left Command Stick Move Left or Right 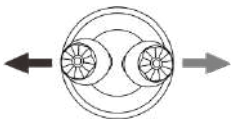	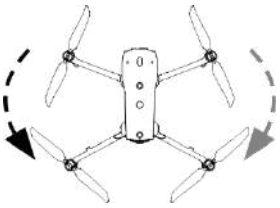	1. The left-and-right direction of the left stick is the yaw stick, which is used to control the heading of the drone. 2. Push the stick to the left, and the drone will rotate counterclockwise; push the stick to the right, and the drone will rotate clockwise. 3. When the stick is returned to the center, the rotational angular velocity of the

		drone is zero, and the drone does not rotate at this time. 4. The larger the degree of the stick movement, the greater the rotational angular velocity of the drone.
Right Stick Move Up or Down	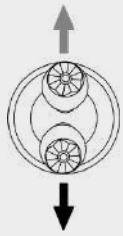 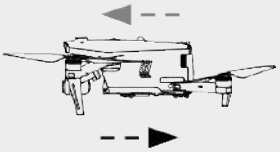	1. The up-and-down direction of the right stick is the pitch stick, which is used to control the flight of the drone in the forward and backward directions. 2. Push the stick up, and the drone will tilt forward and fly towards the front of the nose; pull the stick down, and the drone will tilt backward and fly towards the tail of the drone. 3. When the stick is returned to the center, the drone remains horizontal in the forward and backward directions. 4. The larger the degree of the stick movement, the faster the flight speed of the drone, and the larger the tilt angle of the drone.
Right Stick Move Left or Right	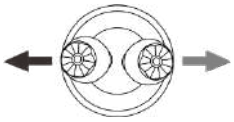 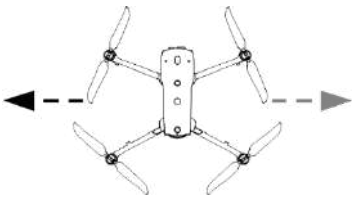	1. The left-and-right direction of the right stick is the roll stick, which is used to control the flight of the drone in the left and right directions. 2. Push the stick to the left, and the drone will tilt to the left and fly to the left of the nose; pull the stick to the right, and the drone will tilt to the right and fly to the right of the nose. 3. When the stick is returned to the center, the drone remains horizontal in the left and -right directions. 4. The larger the degree of the stick movement, the faster the flight speed of the drone, and the larger the tilt angle of the drone.

Remark

- When controlling the drone for landing, pull the throttle stick down to its lowest position. In this case, the drone will descend to an altitude of 1.2 meter above the ground, and then it will perform an assisted landing and automatically descend slowly.

4.10.3 Starting/Stopping the Drone Motor

Table 4-14 Start/Stop the Drone Motor

Process	Stick Operation	Description
Start the drone motor when the drone is powered on	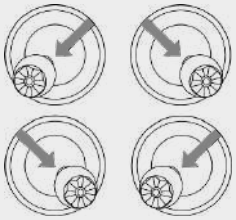	Power on the drone, and the drone will automatically perform a self-check (for about 30 seconds). Then simultaneously pull the left and right sticks inward or outward for 2 seconds, as shown in the figure, to start the drone power motor.
Stop the drone motor	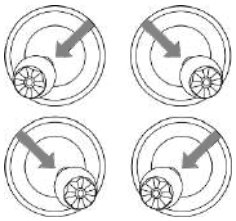	After the drone power motor is started and before takeoff, pull the left and right sticks inward or outward for 2 seconds, as shown in the figure, to stop the drone power motor.
	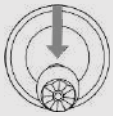	After the drone lands, pull the throttle joystick to the bottom as shown in the figure until the power motor is turned off.

⚠ Warning

- When the drone is taking off and landing, keep it away from people, vehicles, and other moving objects.
- In flight, the drone will initiate a forced landing in case of sensor anomalies or critically low battery level.

4.11 Remote Controller Keys

4.11.1 Custom Keys C1 and C2

You can customize the functions of the C1 and C2 custom keys according to your preferences. For detailed setting instructions, see "6.5 'Settings" Interface" in Chapter 6.

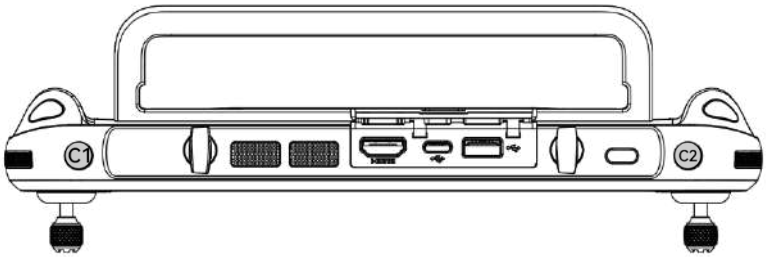

Fig 4-16 Custom Keys C1 and C2

Table 4-15 C1 and C2 Customizable Settings

No.	Function	Description
1	Visual Obstacle Avoidance On/Off	Press to trigger: turn on/off the visual obstacle avoidance sensing system. When this function is enabled, the drone will automatically hover when it detects obstacles in the field of view.
2	Gimbal Pitch Recenter/45°/Down	Press to trigger: switch the gimbal angle. ➢ Gimbal Pitch Recenter: The gimbal pitch angle returns to 0° direction from the current angle; ➢ Gimbal Pitch 45°: The gimbal pitch angle returns to 45° direction from the current angle; ➢ Gimbal Pitch Down: The gimbal pitch angle rotates to 90° direction from the current angle.
3	Map/Video Transmission	Press to trigger: switch between the map full screen display and camera full screen display.
4	Speed Mode	Press to trigger: switch the flight mode of the drone. For more information, see "3.10.2 Flight Modes" in Chapter 3.

⚠ Warning

- When the speed mode of the drone is switched to "Ludicrous", the visual obstacle avoidance system cannot be turned on.

4.11.2 Take-off/Return-to-Home Button and Pause Button

⚠ Warning

- The auto-return function will only be enabled when the drone is in GNSS mode.
- If the obstacle avoidance system is disabled during a return flight, the drone will not be able to automatically avoid obstacles.
- Before using the auto-return function, you need to set the home point in advance in the flight application. For more information, see "6.5 'Settings" Interface" in Chapter 6. If the home point is not set, the drone will take the take-off point as the home point by default.

To manually activate the auto-return function, press and hold the take-off/return-to-home button "" on the remote controller for 2 seconds until the remote controller emits a "beep" sound. Upon receiving the command, the drone will automatically return and land at the preset home point.

⚠ Warning

- In A-Mesh Link mode, long press the take-off button "" for 2 seconds to execute the drone takeoff. Before executing the drone takeoff, you should strictly ensure that the horizontal distance between the drones on the ground is at least 5 meters, and the user needs to stand at least 10 meters away from the tail direction of all drones. If you do not maintain a safe distance as required, the drones may get close to people and cause injuries when automatically adjusting the distance after taking off.

When the drone is in the auto-return state, the remote controller will be disabled. You can short press the pause button "" until the remote controller emits a "beep" sound to pause the auto-return, or press and hold the pause button "" for 2 seconds until the remote controller emits a "beep" sound to exit the auto-return. After pausing or exiting the auto-return, you can reactivate the remote controller for controlling the drone.

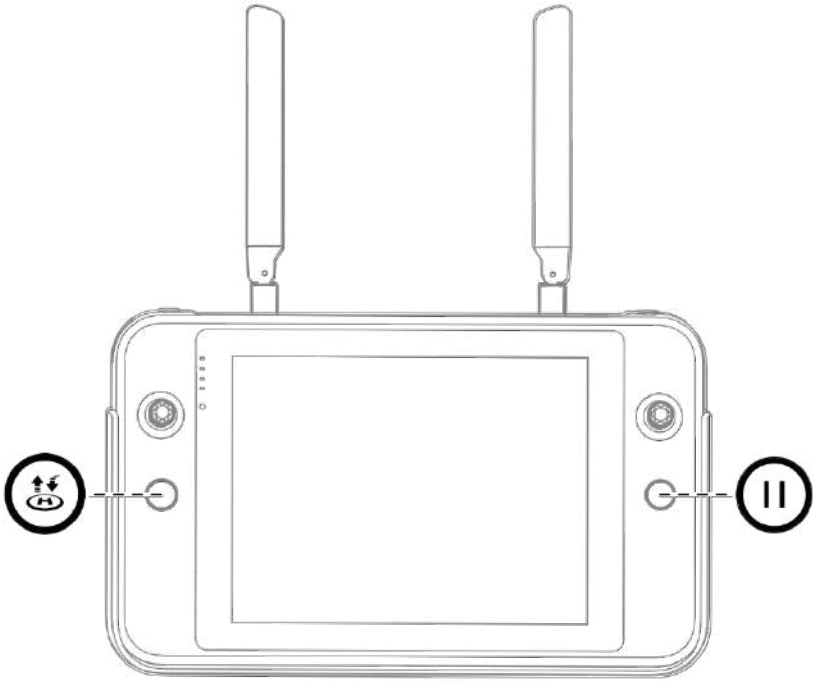

Fig 4-17 Take-off/Return-to-Home Button and Pause Button

Tip

- When the drone pauses an auto-return, it will hover in place. To resume the auto-return, press the pause button "" again until the remote controller emits a "beep" sound.

⚠ Warning

- If the auto-return home point is not suitable for the drone to land (such as uneven ground and crowds), please exit the auto-return before the drone reaches the home point, and then manually resume control to land.

4.12 Turning On/Off the Remote Controller Prompt Sound

In some scenarios, the remote controller will send a prompt sound, such as the screen lock sound, power-on sound and drone alert notification sound.

Tip

- You can access the system settings app from the main interface of the remote controller, and then drag the volume slider in “Sound” to adjust the media volume and notification volume separately.

4.13 Calibrating the Remote Controller

If the remote controller is abnormal, it is recommended to calibrate it, as shown below.

Table 4-16 Calibrating the Remote Controller

Step	Operation	Diagram
1	Turn on the remote controller. After entering the main interface of the flight application, tap “” -> “”, -> " " -> C Calibration" -> “Start calibrating”. Follow the on-screen instructions to calibrate the remote controller.	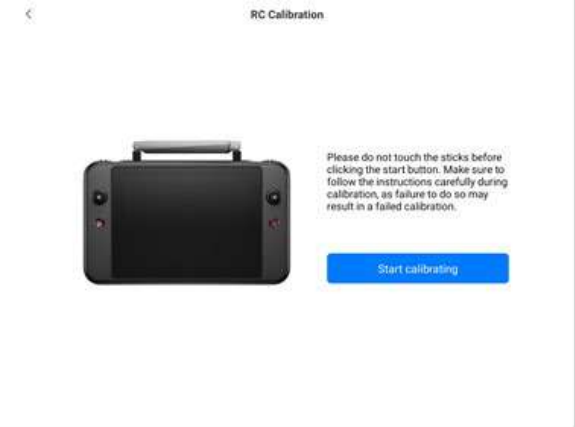
2	Calibration of the dials and command sticks: According to the instructions on the calibration interface, move the left and right dial wheels and the left and right sticks according to the directions shown in the figure and hold for 1 second. At this time, a beep will be heard, and the calibration direction icon will be changed from gray to dark blue, indicating that the orientation calibration was successful. There is no order in which directions are calibrated, until all directions are calibrated, the remote controller calibration is done.	

4.14 HDMI Screen Output

The remote controller is equipped with an HDMI port. The port allows you to output the real-time screen of the remote controller to supported digital devices such as display screens.

Chapter 5 Smart Battery

5.1 Battery Introduction

The drone comes standard with ABX41-D smart battery as the power battery. It's rechargeable lithium-ion polymer (LiPo) battery and features high energy density and capacity. They can be charged with an MDX120W battery charger.

Remarks

- The battery charger is included as part of the drone kit. You do not need to purchase it separately.

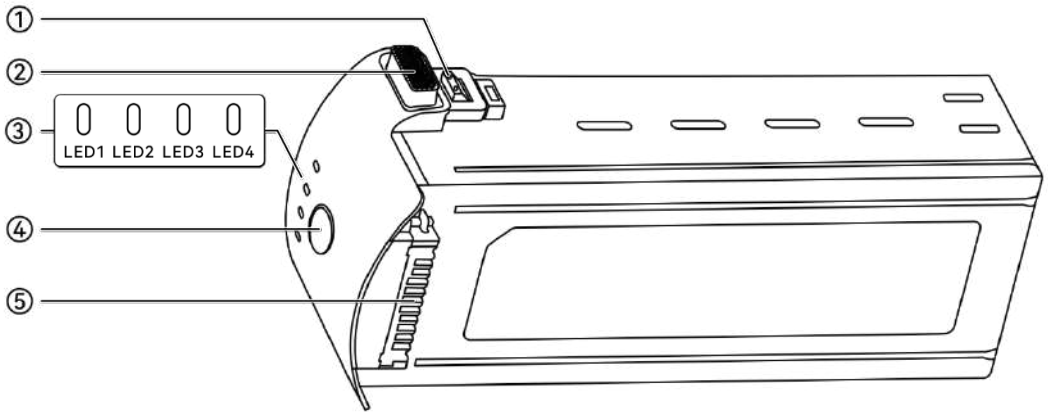

Fig 5-1 Battery Appearance

Table 5-1 Battery Appearance Details

No.	Name	Description
1	Presence Detection Contact	When installing the smart battery into the battery compartment of the drone, the drone will use this contact to perform battery presence detection. If it is not installed properly, a corresponding prompt will be given.
2	Unlock Button	To remove the battery from the drone, press and hold the unlock buttons on both sides and pull out the battery.
3	Battery Level Indicator	Used to display the current battery level of the smart battery in normal situations.
4	Power Button	Press and hold the power button for 3s to turn on or turn off the battery (the drone).
5	Battery Port	When installing the smart battery into the battery compartment of the drone, connect it with the battery compartment port.

5.2 Smart Battery Functions

The smart battery has the following functions:

■ Battery Level Display

The smart battery has a built-in battery level indicator, which shows the current battery level of the smart battery.

■ Self-heating

This function allows the smart battery to operate normally even in low-temperature environments, ensuring flight safety. For more information, see "5.3.4 Smart Battery Self-heating" in this chapter.

■ Communication

The drone can obtain real-time battery information, such as voltage, current, battery level, and battery temperature, through the communication port on the smart battery.

■ Battery Presence Detection

The drone can perform battery presence detection through the presence detection contacts on the smart battery to ensure that the battery is installed in place and the drone is safe.

Tip

- Before the drone takes off, if it is detected that the battery is not installed properly, the flight application will display a warning prompt " Battery not installed properly. Takeoff is forbidden." and the user will not be able to start the power motor and take off.

■ Power Saving Mode

The smart battery will automatically shut down after 30 minutes of inactivity to reduce power consumption.

■ Dust and Water Resistance

When correctly installed in the drone, the battery has an IP43 protection rating.

■ Ultra-low Power Mode

When the smart battery is idle for 12 hours and the battery level is less than 8%, the battery BMS will enter the ultra-low power mode to reduce self-consumption. When entering ultra-low power mode, it needs to be activated by a charger before it can continue to use normally.

■ Self-discharge Protection

If the smart battery is stored in a high-temperature environment or not used for 6 days with a high battery level, the self-discharge protection will be activated. The smart battery will automatically discharge to a battery level of about 60% (by default) and the discharge process takes 2-3 days.

Tip

- Although the battery has no indication of a self-discharge cycle, you may notice that the battery is slightly warm, which is normal.

■ Sleep Mode Protection

If the smart battery has a low battery level, it will automatically enter sleep mode to prevent over-discharge. In this mode, the smart battery does not respond when the power button is pressed. To wake up the battery, you can connect it to a battery charger.

■ Charge Temperature Protection

The smart battery will stop charging when its temperature is lower than 5℃ or higher than 45℃ during charging, as charging the battery under such temperatures will damage the battery.

■ Overcurrent Protection

The smart battery will stop charging when the charging current is too high, as charging the battery with a high current can severely damage the battery.

■ Overcharge Protection

Charging will stop automatically when the smart battery is fully charged, as overcharging can severely damage the battery.

■ Balance Protection

The voltage of each battery cell in the smart battery is automatically kept balanced to protect the battery and maximize the performance of the battery.

■ Short Circuit Protection

Once a short circuit is detected, the power supply of the smart battery will be cut off to protect the battery.

⚠ **Warning**
● Before using the smart battery, please carefully read and strictly follow the requirements in this Manual, “Battery Safety Operation Guidelines”, and “Disclaimer”, and those on the battery's surface sticker. The user shall undertake all consequences if he/she fails to follow the usage requirements.

5.3 Smart Battery Usage

- Please use a smart battery within the appropriate temperature range (refer to the operating temperature of the drone). Using it in too high or low temperatures will affect the battery’s safety and lifespan and may cause spontaneous battery combustion or permanent damage to the battery.
- Do not use the drone in a strong electrostatic (such as thunderstorms) or electromagnetic environment. Otherwise, some functions of the smart battery may fail (e.g., abnormal battery output and power failure), resulting in serious drone malfunctions.
- Do not use a smart battery that has ever been dropped from the drone or subjected to external impacts.
- Do not use a water-soaked smart battery or immerse a smart battery in water or other liquids. Water contact inside the battery may cause corrosion, resulting in spontaneous battery combustion and even an explosion.
- Do not use a smart battery that emits smoke, bulges, leaks liquids, or has a damaged appearance.
- The liquid inside the smart battery is corrosive. If it leaks, please keep away from it. If it accidentally contacts your skin or eyes, rinse immediately with clean water for at least 15 minutes and seek medical attention.

- Do not disassemble, puncture, strike, crush, or burn a smart battery in any way. Otherwise, it may lead to battery combustion or even explosion.
- Do not short-circuit the positive and negative terminals of a smart battery.
- If the battery connector of a smart battery is dirty, use a dry soft cloth to clean it. Otherwise, it may cause poor contact, leading to energy loss or charging failure.
- Before replacing the smart battery of the drone, make sure that the battery connector, battery compartment port, battery surface, and battery compartment surface are dry and free of water, and then insert the battery into the drone.

5.3.1 Installing/Removing the Smart Battery

■ Install the Smart Battery

1. Turn off the smart battery before installing the battery and ensure that there is no dirt on the surface of the battery presence detection contact and the contact surface of the drone.
2. Slowly insert the smart battery into the battery compartment on the drone fuselage, and you will hear a clicking sound when the battery is in place.

■ Remove the Smart Battery

1. Turn off the smart battery before removing the battery.
2. Press and hold the unlock buttons on both sides of the smart battery and slowly pull out the battery.

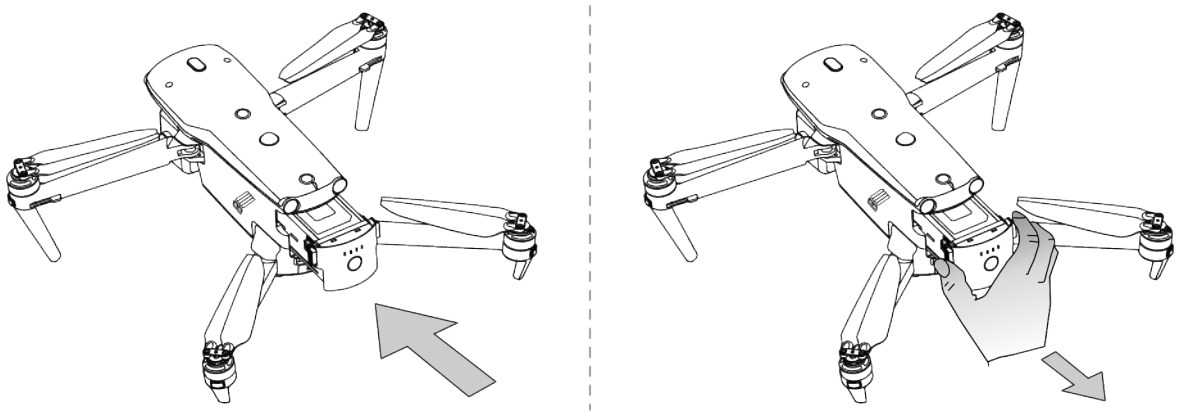

Fig 5-2 Install/Remove the Smart Battery

⚠ Warning

- If the smart battery is not installed properly, it may cause the battery to fall off during the flight, damage the drone, or even cause personal injury.
- Before installing the smart battery on the drone, make sure that the battery is turned off.

❗ Important

- The unlock buttons of the smart battery are wearable parts. Please do not press them hard to avoid any possible damage to the internal structure of the battery.

5.3.2 Turning On/Off the Smart Battery

■ Turning On the Smart Battery

When the smart battery is turned off, press and hold the power button for 3 seconds to turn on the battery.

■ Turning Off the Smart Battery

When the smart battery is turned on, press and hold the power button for 3 seconds to turn off the battery.

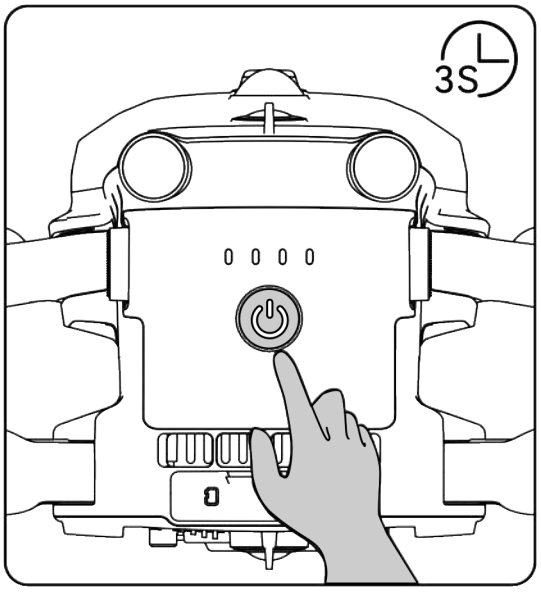

Fig 5-3 Turn On or Off the Smart Battery

Important

- If the smart battery is not installed in the drone, it is not recommended to turn on/off the battery, and attention should be paid to insulation protection at the battery connector.
- Before removing the smart battery from the drone, turn off the battery. The LED1 and LED4 battery level indicators on the smart battery will blink 5 times to indicate that the drone is shutting down. Remove the smart battery from the drone after all battery level indicators are off.

5.3.3 Checking Battery Level

When the smart battery is off, short press the battery power button for 1 second to check the current battery level through the battery level indicator status.
After the drone is powered on, users can also check the indicator status for current battery level.

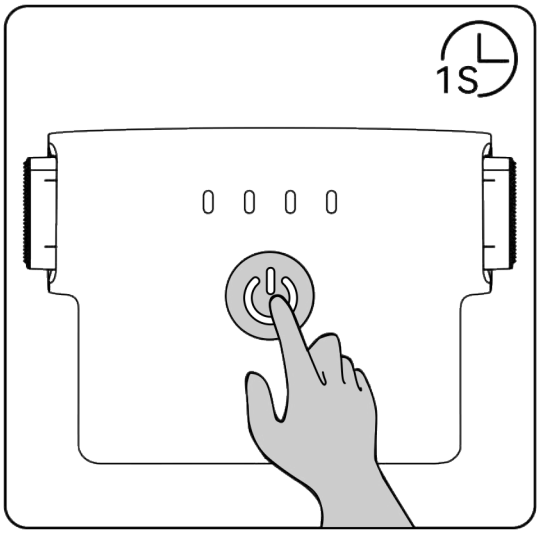

Fig 5-4 Checking Battery Level When the Smart Battery is Off

Table 5-2 Battery Level Indicator Status (While Not Charging)

0~12%	13%~25%	26%~37%	38%~50%
51%~62%	63%~75%	76%~87%	88%~100%

: Indicator light is always on : Indicator light blinking : Off

Tip

- After the drone is connected to the remote controller, you can check the current smart battery level of the drone in the top status notification bar or on the "Battery Information" interface of the flight application. For more information, see “6.3 Status Notification Bar” and “6.5 “Settings” Interface” in Chapter 6.

5.3.4 Smart Battery Self-heating

The smart battery has a self-heating function, which can increase the battery temperature in low-temperature environments, helping maintain good output performance.

- When the smart battery is installed in the drone and the battery power is turned on, if the battery temperature is lower than 15℃, the battery self-heating function will be activated. After the drone takes off, the battery self-heating function will be automatically turned off.
- If the smart battery is not installed in the drone, short press the power button for 1 second and then press and hold the power button for 3 seconds to activate the battery self-heating

function to keep the battery temperature between 15℃ and 20℃ for 10 minutes. At this point, if you want to exit the battery self-heating function, short press the power button for 1 second, and then press and hold the power button for 3 seconds.

- When the smart battery is connected to the MDX120W battery charger and the battery power is turned on, if the battery temperature is lower than 5℃, the charger will supply power to the smart battery for self-heating. Once the battery temperature reaches 15℃, the self-heating function will be turned off.

Important

- When the self-heating function of the smart battery is manually activated, the battery should have at least around 10% of remaining power for self-heating.

When the smart battery is in the states of self-heating and heat preservation, the statuses of the battery level indicators are shown in the following table.

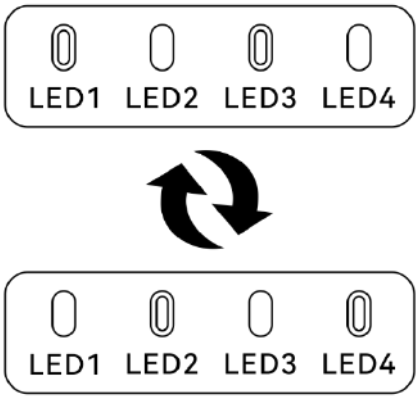

Fig 5-5 Self-heating State

Fig 5-6 Heat Preservation State

Table 5-3 Battery Level Indicator Status

No.	Description
1	LED1, LED3 and LED2, LED4 blink alternately in groups, indicating that it is heating.
2	The 4 LEDs blink at the same time, indicating that it has entered the heat preservation state.
	▯: Indicator light blinking ▯: Off

⚠ Warning

- When the temperature of the smart battery is lower than -10℃ or higher than 70℃, the drone will not be allowed to take off. It is recommended to wait until the self-heating is over or the battery naturally cools down to an appropriate temperature before operating.
- When the temperature of the smart battery is lower than 5℃, the internal resistance of the battery will increase and the voltage will drop suddenly due to the low temperature, which will reduce the usable capacity of the battery and reduce the operating time of the drone. In low-temperature environments, make sure that the battery is fully charged before taking off.
- If the battery level of the smart battery is lower than 50%, it is not recommended to take off. When the battery level is low, it is difficult to activate the battery, which will reduce flight safety.
- During the flight, when the flight application prompts a low battery alarm, it is recommended to immediately return to the home point or land.
- In some low-temperature environments, even if the self-heating function is activated, the battery temperature may still not reach the usable temperature. In such cases, please add insulation measures during the heating process.
- In order to get the best performance from the smart battery, it is recommended to keep the battery temperature between 15℃ to 35℃ before flying.
- In a low-temperature environment, the self-heating time of the battery may be longer. It is recommended that you keep the battery warm in advance to shorten the self-heating time.

5.3.5 Charging the Smart Battery

Connect the charging port of the official battery charger MDX120W to the notch of the metal electrode of the smart battery, and connect the AC plug to the AC power supply (100-240 V~ 50/60 Hz).

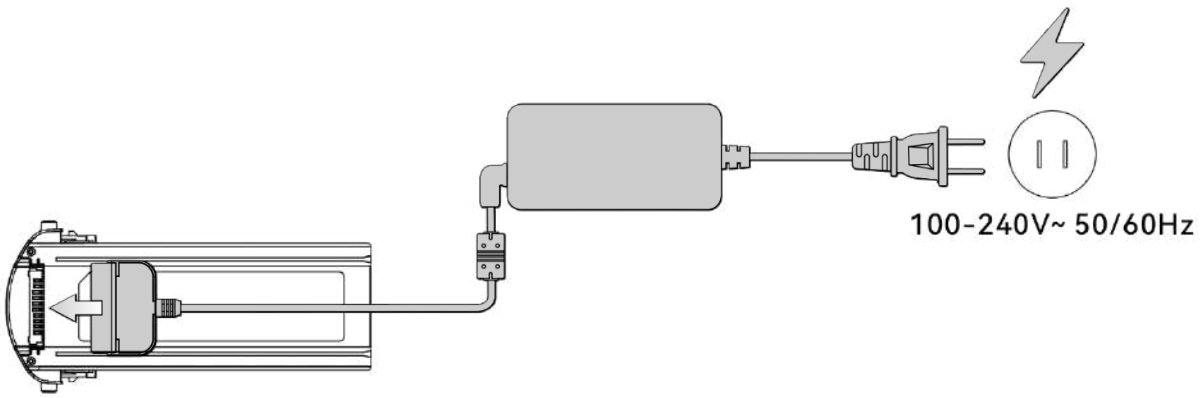

Fig 5-7 Use the Battery Charger to Charge the Smart Battery

Table 5-4 Battery Level Indicator Status (While Charging)

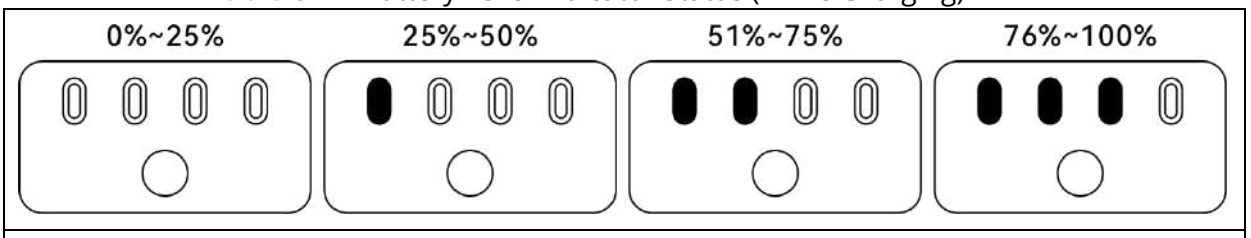

: Indicator light is always on : Indicator light blinking

Warning

- Do not charge a battery that emits smoke, is bulged, leaks liquids, or has a damaged appearance.
- Do not use damaged charging devices to charge the smart battery.
- Modifying the official smart battery or charging device provided by Autel Robotics is prohibited.
- Only use the battery and charging device provided by Autel Robotics. Autel Robotics is not responsible for any consequences, such as battery accidents and flight failure, caused by the use of third-party batteries or charging devices.
- Keep the smart battery away from flammable and explosive items during charging.
- After the smart battery is fully charged, disconnect the connection between the charger and the smart battery and power supply promptly.
- After flight, it is recommended to wait until the smart battery naturally cools down to an appropriate temperature before charging the battery. If the temperature of the smart battery is higher than 45℃, when the battery is connected to the charging device, the battery temperature protection function will be activated, and the battery cannot be charged until its temperature drops below 40℃.

Remarks

- It is recommended to fully charge the smart battery of the drone before flight.
- Generally, it takes about 90 minutes to fully charge the smart battery of the drone, but the charging time is related to the remaining battery level.

Table 5-5 Other Battery Indicator Warning Instructions

LED1	LED2	LED3	LED4	Warning Description
				The temperature is too high for charging.
				The charging current is too high, which causes a short circuit.
				A circuit overcurrent, a circuit overload, or a short circuit occurs during battery discharge.

: Indicator light blinking : Off

5.4 Storing and Transporting the Smart Battery

When storing the smart battery, keep the battery away from water or heat sources and store it in a dry, well-ventilated environment at room temperature.
Ideal storage conditions: The battery level is at around 60%, the ambient temperature is between 22℃ to 28℃, and the ambient humidity is 65%±20% RH.
The energy of the ABX41-D smart battery is 136.5Wh. Please refer to local lithium battery transportation policies for battery shipping or carrying.

⚠ Warning

- Before storing or transporting the smart battery, please turn off the battery.
- Store the smart battery out of the reach of children and pets.
- Store the smart battery away from direct sunlight, water, or reactive chemicals.
- Do not expose the smart battery to open flame, explosives, or other hazards.
- Do not store the smart battery in extreme temperatures. Otherwise, the lifespan of the battery may be shortened and the battery may even become damaged or ineffective. If the battery is not used for more than 1 day, it should be stored in -20℃~+35℃.
- Do not place the smart battery in a microwave or pressure cooker.
- Do not place the smart battery directly on conductive surfaces (such as metal shells or panels).
- Do not place heavy objects on the smart battery. When subject to an external force, the battery may be damaged or even catch fire or explode.
- Do not store or transport the smart battery with sharp objects, watches, metal necklaces, earrings, or other metal items.
- Do not transport batteries that have a damaged appearance or a battery level of more than 30%.
- If the smart battery is left idle for a long time, please charge it every three months to avoid a shortened battery lifespan resulting from long-term low battery levels.

5.5 Maintaining and Handling the Smart Battery

5.5.1 Maintaining the Smart Battery

In order to maintain the activity of the smart battery of the drone, it is recommended to perform battery maintenance if any of the following conditions are met:

- It is recommended to perform battery maintenance for the smart battery every 50 times of battery cycle.
- The idle time of the smart battery reaches 3 months.
- Occasionally, there are situations that affect the lifespan of the smart battery. In this case, you can try maintenance and repair.
- The flight application reminds you when the smart battery needs maintenance.

The following battery maintenance check items are available for the smart battery:

1. Perform a standard charge and discharge operation on the smart battery.

2. Insert the smart battery into the drone and turn on the power. Check the battery information through the flight application, whether the voltage difference between the battery cells is less than 0.1 V, and whether the battery firmware has been upgraded to the latest version.
3. Check whether the smart battery is bulged, leaked, or damaged.
4. Check the battery connector for dirt, damage, or rust.

5.5.2 Standard Charging and Discharging Process

Use the maintenance charging mode of the original charger, and proceed as follows:
1. Use the battery charger MDX120W included in the standard drone kit to charge the smart battery to 100% and let the battery sit for 1 hour.
2. Insert the smart battery into the drone to fly, control the drone to land when the remaining battery level is less than 20%, and then take out the battery.
3. Let the smart battery sit for 8 hours.
4. After the above operations are completed, a standard battery charging and discharging operation is completed.

5.5.3 Smart Battery Replacement Standards

- There are obvious bulges, leakage, and damage on the smart battery surface, it is recommended to replace the battery with a new one.
- Damage to or irreparable rust on the metal contacts at the power supply port of the smart battery, it is recommended to replace the battery with a new one.
- Damage to or irreparable rust on the presence detection contact of the smart battery, it is recommended to replace the battery with a new one.
- After the number of cycles of the smart battery reaches 200, it is recommended to replace the battery with a new one.
- After 2 consecutive standard charge and discharge operations, if the abnormal battery still cannot be repaired, it is recommended to replace it with a new one.

5.5.4 Recycling the Smart Battery

- If the smart battery is discarded due to damage, leakage, or other issues that compromise the integrity of the battery shell, it is recommended to completely immerse the battery in an insulated bucket filled with 5% salt water for more than 48 hours until the battery is completely discharged.
- If the smart battery is normally retired, confirm that it is completely discharged, and then properly recycle it according to local lithium battery waste disposal policies to avoid environmental pollution.

Important

- When the smart battery catches fire, please use solid fire extinguishers such as sand or dry powder extinguishers.

Chapter 6 Flight Application

6.1 Application Introduction

The flight application is a flight application developed by Autel Robotics for enterprise applications. The application integrates waypoint mission, polygon mission and other mission modes and is easy to quickly get started. The latest version (V2.4.54 and higher versions) supports Single Link and A-Mesh Link modes.

Remarks
● This chapter is based on the V2.4.54 version of the flight application. Some UI interfaces may differ due to version upgrade. Please refer to the UI interfaces actually displayed.

6.2 Main Interface

After turning on the drone, you will automatically enter the main interface.

Fig 6-1 Main Interface of the flight application
(Fusion 4T V2 gimbal and in A-Mesh Link mode)

Table 6-1 Details of the Main Interface of the flight application

No.	Name	Description
1	Status Notification Bar	For details about the status notification bar, please refer to "6.3 Status Notification Bar" in this chapter. In Single Link: ➢ It displays the drone system's alarm notification and information, flight mode, mission status, RC battery, RC signal, GNSS signal, drone battery, OA status, and flight status. In A-Mesh Link mode: ➢ When all drones are selected ("ALL" selected), it only displays the drone system's alarm notification and information and RC battery. ➢ When one drone in the team is selected, it displays the drone's alarm notification and information, flight mode, mission status, RC battery, RC signal, GNSS signal, drone battery, OA status, and flight status.
2	Toolbar	Offers quick access to certain frequently used functions. Users can add icons of frequently used functions from "Menu" on the toolbar.
3	"Camera" Full Screen Interface	Displays the Video Transmission screen of the drone selected currently. Users can control the gimbal camera to shoot or record in this interface. ➢ When all drones are selected ("ALL" selected), it displays the Video Transmission display of the drone selected before all drones are selected.
4	"Map" Preview Interface	Provides access to the full-screen "Map" interface.
5	Camera Function Access	Offers access to the gimbal camera operations and settings. ➢ When all drones are selected ("ALL" selected), "" icon will not be displayed.
6	Device Preview Switch	In A-Mesh Link mode, it displays all drones in the team (which does not appear in Single Link), users can select a drone to set and control it solely. ➢ When all drones are selected ("ALL" selected), "" icon is displayed in grey and is unavailable.
7	Toolbar Hide Button	Tap it to hide the toolbar.

Tip

- The flight application can automatically identify the gimbal model mounted on the drone and adjust the display content of the main interface accordingly. When a drone with a different gimbal model is connected to the remote controller, the display content on the main interface of the flight application may vary.

Table 6-2 Multi-Screen Switching Operations on the Main Interface

No.	Icon	Meaning	Description
1		Dual-Screen Mode	Tap this icon to enter the dual-screen mode. Fusion 4T V2 gimbal: The left and right sides of the remote controller screen can display any two of the three split-screen interfaces, which are "Map", "Zoom", and "Infrared". Fusion 4N V2 gimbal: The left and right sides of the remote controller screen can display any two of the four split-screen interfaces, which are "Map", "Wide Angle", "Night Vision", and "Infrared". Fusion 4NZ-L V2 gimbal: The left and right sides of the remote controller screen can display any two of the three split-screen interfaces, which are "Map", "Night Vision", and "Infrared".
2		Three-Screen Mode	Tap this icon to enter the three-screen mode. The flight application defaults to the three-screen mode. Fusion 4T V2 gimbal: The left side of the remote controller screen displays the "Map" split-screen interface, the upper-right side displays the "Zoom" split-screen interface, and the lower-right side displays the "Infrared" split-screen interface. Fusion 4N V2 gimbal: The left side of the remote controller screen defaults to the "Map" split interface, the upper-right side defaults to the "Wide Angle" split-screen interface, and the lower-right side defaults to the "Night Vision" split-screen interface. Each split-screen interface can be switched to the "Infrared" split-screen interface. Fusion 4NZ-L V2 gimbal: The left side of the remote controller screen defaults to the "Map" split interface, the upper-right side defaults to the " Night Vision" split-screen interface, and the lower-right side defaults to the "Infrared" split-screen interface.

3		Four-Screen Mode	Tap this icon to enter the four-screen mode. This mode is only supported by Fusion 4N V2 gimbal. In the four-screen mode, the upper-left side of the remote controller screen displays the "Wide Angle" split-screen interface, the lower-left side displays the "Map" split-screen interface, the upper-right side displays the "Night Vision" split-screen interface, and the lower-right side displays the "Infrared" split-screen interface.
4		Maximize Window	Tap this icon to adjust a split-screen interface to the corresponding full-screen interface.

Tip

- In any camera full-screen interface or camera split-screen interface, you can swipe up anywhere to hide all function icons and swipe down to restore the display of function icons.

6.3 Status Notification Bar

Fig 6-2 Status Notification Bar of the flight application

Table 6-3 Details of the Status Notification Bar of the flight application

No.	Icon	Meaning	Description
1	The compass is abn...	Status and Fault Warning	Displays the current warning information of the drone, For details, please refer to "2.16 Warning Information Reference Table" in Chapter 2: ➢ Gray indicates that the remote controller is not connected to the drone. ➢ Orange indicates a medium-level warning. In this case, the drone will not be prohibited from taking off but should pay attention to flight safety. ➢ Red indicates a high-level warning. In this case, the drone will be prohibited from taking off and can take off only after you solve the fault.
2	Visual Positioning Mode	Flight Status	Displays the current flight status. There are 3 modes: GNSS mode, visual positioning mode, and attitude mode. For more information, see "3.10.1 Flight Status" in Chapter 3.
3	Manual Flight	Mission Status	Displays the current mission type and mission status of the drone.

4		No SD Card	Indicates that there is no microSD card installed in the drone currently.
5		Remote Controller Battery	Displays the current battery level of the remote controller.
6	RC	Remote Controller Signal Status	1. Displays the current communication signal status between the remote controller and the drone. 2. Tap this icon to display the specific signal status: When there are 4 to 5 green signal bars, the signal strength is shown as "Strong"; When there are 2 to 3 yellow signal bars, the signal strength is shown as "Middle"; And when there is 1 signal bar, the signal strength is shown as "Weak". 3. When the remote controller is not connected to the drone, the remote controller signal is displayed in gray color.
7	RTK 21 FIX	RTK Signal Status	After a RTK module is installed on the drone, it displays the RTK signal status and positioning accuracy level of the drone.
8		GNSS Signal Status	1. Displays the current GNSS signal status of the drone. 2. Tap this icon to display the specific signal status and satellite connection status. 3. If the drone receives no GNSS signal, the GNSS signal is displayed in gray color.
9		drone Battery	1. Displays the current battery information of the drone. 2. Tap this icon to display the battery level, voltage, and temperature of the drone battery.
10		Obstacle Avoidance System	Displays the current activation status of the drone obstacle avoidance system. ➢ Green indicates that the obstacle avoidance system is activated. ➢ Red indicates that the obstacle avoidance system is deactivated.
101	Standard	Speed Mode Display	Displays the current speed mode of the drone. Four modes are available, that is, Slow mode, Smooth mode, Standard mode, and Ludicrous mode. You may tap this icon to switch flight mode. For more information about the speed modes, see "3.10.2 Flight Modes" in Chapter 3.

6.4 Toolbar

The toolbar is displayed below the system status notification bar of the flight application, which allows you to quickly activate certain functions.
In the toolbar, you can press and hold and drag the function icons to customize the sorting. At the same time, you can also tap on the "" icon to enter "Menu" and then tap on the "" icon on the right side of "Menu" to add a function icon into or delete a function icon from the toolbar. You can also add the icon from "Menu" to the toolbar.

Tip

- You can add a maximum of 12 function icons to the toolbar, some functions need drone hardware support and unavailable functions will be displayed in grey.
- When all drones are selected ("ALL" selected), some functions will be displayed in grey and be unavailable.

Fig 6-3 Toolbar

Table 6-4 Toolbar Details

No.	Icon	Name	Description
1		Menu	Tap this icon to enter the "Menu", where you can view all shortcut function icons.
2		Edit	Tap this icon to add function icons from "Menu" to the "Toolbar" or move the function icons in the "Toolbar" to "Menu".
3		Tripod	Tap this icon, and the drone camera will automatically lock onto the selected target.
4		Strobe	Tap this icon to turn on the strobe on the top of the drone fuselage.
5		PinPoints History	Tap this icon to view all history pinpoints in the map.
6		Stealth	Tap this icon, and the drone will turn off the arm lights, strobes, and auxiliary bottom lights after users sign the disclaimer.

7		Payload	Tap this icon to open function panel of the drone payload.
8		Aux Light	Tap this icon to turn on the bottom auxiliary light, which is used to improve the environment lightness when the drone is landing in a dark light environment.
9		RECOG	Tap this icon to intelligently identify the target object type.
10		Laser	Tap this icon to automatically measure the distance from the target point at the center of the lens to the drone, as well as the target point's altitude and coordinates (longitude and latitude).
11		Screenshot	Tap this icon to capture the current screen in a screenshot.
12		Recording	Tap this icon to start recording the current screen.
13		Formation Flight	When all the drones in the team take off and fly more than 30 meters above the ground, select all the drones and tap this icon to execute formation flight. During the flight, non-relay drones will approach the relay drone according to the set horizontal interval, and finally fly in the same direction as the relay drone does.
14		Polygon	Tap this icon to enter the "Polygon" mission editing interface.
15		Record	Tap this icon to record real-time attitude, motion, and other parameters of the drone and gimbal during a flight mission, which allows for repeating the operation process for the next mission.
16		Import	Tap this icon to import the missions (supporting KML format) saved locally into the mission library.
17		Quick	Tap this icon, after setting the quick mission point, the drone can fly to the mission point to execute temporary mission.
18		Waypoint	Tap this icon to enter the "Waypoint" mission editing interface.

19		Mission	Tap this icon to enter the “Missions” interface, where you can query, edit, favorite, and delete previously saved historical flight missions.
20		Stitch	Tap this icon to configure the remote controller to connect to a computer device with 2D/3D mapping software installed, which allows for fast mapping.
21		Orbit	Tap this icon, the drone will fly in circle with the current position as the circle center.
22		Geofence	Tap this icon to enter the "Geofence" mission editing interface.
23		Photo Replication	Tap this icon, the drone, after flying to the target point, will recap the picture and videos shot or recorded last time.
24		Album	Tap this icon to view materials from the drone's album and the local album and download or delete them.
25		Defog	Tap this icon to make the shooting or recording scene more transparent and enhance color contrast, which is used to eliminate the "fogging phenomenon" in the picture or the lack of picture clarity caused by smog.
26		Pro Setting	Tap this icon to make professional settings for the gimbal camera parameters.
27		Brightness	Tap this icon to move the slider left and right to adjust the brightness of the camera.
28		Night Mode	Tap this icon, and the wide-angle camera and Night Vision cameras will enter night shooting mode. Even when shooting in a low-light environment, the picture will remain clear.
29		Single Link	Tap this icon to achieve frequency matching between a RC and a drone.
30		A-Mesh Link	Tap this icon to achieve frequency matching between up to 2 RCs and 2 drones to form a team.
31		Aircraft PinPoint	Tap this icon to place a marked point in the drone’s current position.
32		RC pinpoint	Tap this icon to place a marked point in the RC’s current position.

33		PinPoint	Tap this icon to free pinpoint on the map. Both Pilot Role RC and Observer Role RC can do free pinpoint operation. In the same mission, RCs in the team can share the first 10 free pinpoint marked points. Marked points that rank after 10th will be saved in the RC that conducts free pinpoint correspondingly.
34		Live-RC	Tap this icon to set live streaming of real-time aerial videos from the drone. Three streaming methods, that is, RTMP, RTSP and GB28181, are supported.
35		Cloud Service	Tap this icon to configure the remote cloud service for the UAS.
36		Support	Tap this icon to enter the "Personal Center" interface.
37		Settings	Tap this icon to enter the “Settings” interface.
38		Flight Log	Tap this icon to view the flight logs of the drone or synchronize them to a third-party platform. To use this function, you need to log in to your Autel Robotics cloud service account.
39		Log	Tap this icon to query the flight logs of the drone. To use this function, you need to log in to your Autel Robotics cloud service account.
40		Encrypt	Tap this icon to set a security password for encrypting captured media materials.
41		User Manual	Tap this icon to check all usage guides of relevant flight application.

6.5 “Settings” Interface

1. In A-Mesh Link mode, after all drones in the team are selected (“ALL” selected), users can tap “⤢” icon at the lower right corner of the interface to expand drone quick setting panel. In the panel, you can view status information (aircraft battery level, RC signal and GNSS signal) of all aircrafts and switch the aircraft gimbal camera lens.

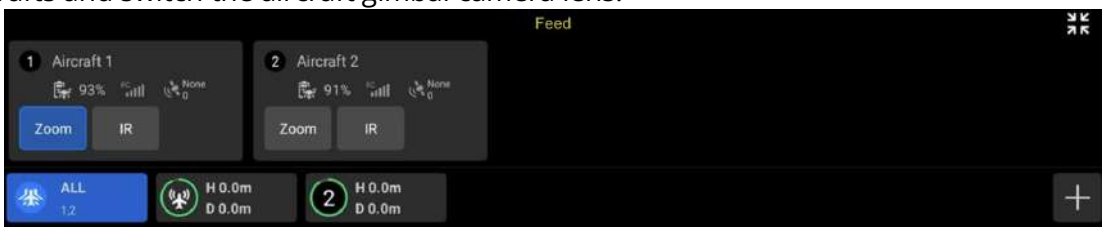

Fig 6-4 Feed Panel in A-Mesh Link Mode

Tips

- Tap "" icon at the upper right corner of the feed panel to fold this panel.
- Tap "" icon at the lower right corner of the feed panel to enter the mesh network settings interface ("my team" interface).

2. In Single Link or when taping a drone in the team in A-Mesh Link mode, users can tap the "" icon on the right side of the toolbar, and tap "" icon to enter the setting interface of the drone. In the setting interface, users can set parameters such as flight control, obstacle avoidance, remote controller, Video Transmission, battery, gimbal and the related secondary functions.

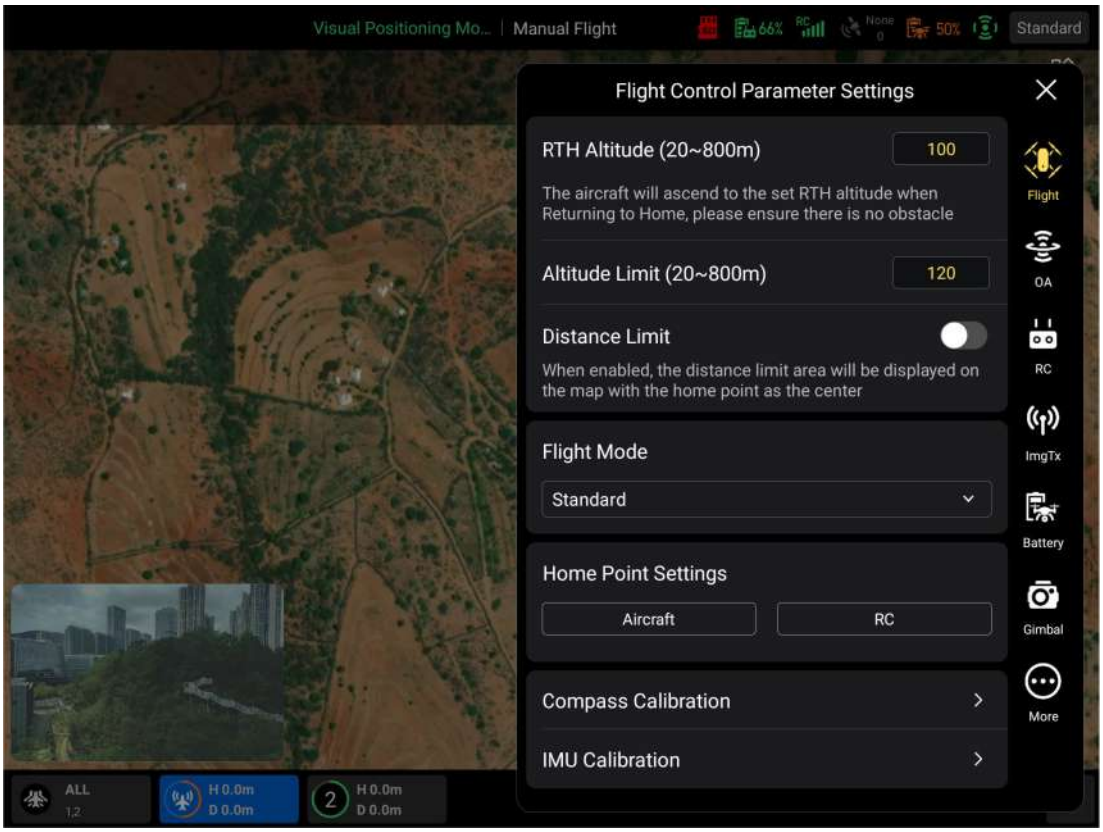

Fig 6-5 Setting Interface (Flight Control Parameter Setting)

■ Flight Control Parameter Setting

In the sidebar of the "Settings" interface, tap the "" icon to enter the "Flight Control Parameter Setting" interface, you can perform the following operations.

1. Set RTH Altitude

The aircraft will rise to the set RTH altitude before auto return.

2. Set Altitude Limit

- After taking off, the aircraft can ascend to the maximum altitude set.

3. Turn On/Off Distance Limit

- If this function is turned on, the aircraft will fly within a circle with the home point as the center and the set distance limit value as the radius.
- If this function is turned off, the aircraft can be manually controlled by the user to keep on flying until the battery runs out or "Singal Lost" is triggered.

4. Set Flight Mode

The aircraft supports four flight modes: Slow, Smooth, Standard, and Ludicrous. For the meaning of each mode, see "3.8.2 Flight Modes" in Chapter 3.

5. Set Home Point

- If "Aircraft" is selected, the home point is the position where the aircraft takes off.
- If "RC" is selected, the home point is the current position of the remote controller.

6. Calibrate Compass

For the detailed calibration information, see "2.11 Aircraft Calibration" in Chapter 2.

7. Set "Singal Lost"

Singal Lost refers to the activity that the aircraft will perform when the Autel Enterprise App pops up a window saying "Aircraft disconnected" during flight. By default, the signal lost is set to "Return to Home".

- If "Return to Home" is selected, when the aircraft disconnects, the aircraft will automatically return to the home point.
- If "Hover" is selected, when the aircraft disconnects, the aircraft will hover at the current position.
- If "Land" is selected, when the aircraft disconnects, the aircraft will land at the current position.

⚠ Warning

- Although the flight application allows you to set a flight altitude within the range of 20-800 meters, this does not mean that the set altitude complies with local laws and regulations. Users can adjust the drone's altitude limit by signing the "Altitude Limit" User Operation Agreement to fly in airspace above the statutory altitude limit. Note: After signing the agreement, all flight risks and consequences arising therefrom shall be borne by the user.
- The RTH altitude should be set higher than the altitude of obstacles within the flight range.
- The RTH altitude setting should comply with the local (within the flight range) laws and regulations.
- For information about adjusting the RTH altitude of the aircraft, see "2.7.4 Auto-Return Mechanism" in Chapter 2.

Remark

- If the home point is not set, the aircraft will take the take-off point as the default home point.

Tips

- Appropriate altitude limit and distance limit settings can improve flight safety.
- The altitude limit value set should not be lower than the value of the RTH altitude, and should conform to the requirements of the local laws and regulations (within the flight range). Aircraft flying at an inappropriate altitude may pose legal risks. Please comply with the flight safety requirements of the relevant areas.
- When the aircraft initiates a return to home due to a disconnection, even if the aircraft re-connects to the remote controller, it will continue the return process. In this case, user can

pause or exit the auto return by shortly pressing the pause button "⏸" on the remote control, or long pressing the button for 2 seconds until the remote controller emits a "beep" sound, or pulling down the pitch stick of the remote controller. After the auto return, the remote controller will regain the control of the aircraft.

■ OA Settings

In the sidebar of the "Settings" interface, tap the "" icon to enter the " OA Settings " interface, you can perform the following operations.

1. Set Collision Avoidance Behavior

- If "Emergency stop" is selected, the safety distance can be set. In manual flight, when the aircraft encounters an obstacle, it will automatically slow down, brake and hover at the "safety distance" set.
- If "Bypass" is selected, the safety distance can be set. When the aircraft encounters an obstacle, it will automatically slow down and make its own decision to bypass the obstacle in any direction, left, right or up at the "safety distance" set.
- If "Turn off" is selected, the aircraft will not automatically slow down, brake or bypass when it encounters an obstacle.

2. Set Warning Distance

If the aircraft detects an obstacle, it will send a warning at the warning distance as set.

3. Turn On/Off Radar Display

- If this function is turned on, when the aircraft detects an obstacle, it will provide risk warnings on the camera interface based on the set brake/warning distance.
- If this function is turned off, when the aircraft detects an obstacle, it will not provide risk warnings on the camera interface.

4. Turn On/Off Obstacle Detection Notification Sound

- If this function is turned on, when the aircraft detects an obstacle, it will emit a sound alert.

5. Turn On/Off Landing Protection

If this function is turned on, the aircraft will detect whether the ground surfaces are suitable for landing before it lands.

⚠ Warning

- To ensure flight safety, it is recommended to set the obstacle avoidance behavior as "Emergency stop" or "Bypass".
- When the flight mode of the aircraft is set to "Ludicrous", the OA system function is unavailable.

Tips

- When the aircraft performs automatic missions (such as automatic return, waypoint missions, and polygon missions), the aircraft's collision avoidance behavior will be "Turn off" or "Bypass" by following the setting (when the collision avoidance behavior is set to "Emergency stop" or "Bypass" in the "OA Settings").
- After the landing protection function is turned on, if the aircraft detects that the ground surface is not suitable for landing, it will keep hovering over the landing point. In this case,

you need to use the command sticks to manually control the aircraft to land at an appropriate location.

■ RC Settings

In the sidebar of the “Settings” interface, tap the "" icon to enter the "RC Settings" interface, you can perform the following operations.

1. Set Stick Mode

The aircraft supports three stick modes: Mode 1, Mode 2, and Mode 3. For the differences between the three stick modes, see "4.10.1 Stick Modes" in Chapter 4. The default stick mode is Mode 2.

2. Calibrate the Remote Controller

For the detailed calibration information, see “4.13 Calibrating the Remote Controller” in Chapter 4.

3. Set RC Custom Button C1/C2

For the functions of the C1/C2 custom buttons, see “4.11.1 Custom Keys C1 and C2” in Chapter

4. Set EXP

The X-axis is the physical output of the command stick, and the Y-axis is the logical output of the command stick. That is, the X-axis represents the movement generated by the current command stick, and the Y-axis represents the actual response strength of the current aircraft.

5. Remote Controller Power On/Off Sound

Turn on this function, a beep sound will be emitted when the remote controller is powered on/off. Otherwise, the remote controller will turn on and off silently.

■ Video Transmission Settings

In the sidebar of the “Settings” interface, tap the "" icon to enter the "Video Transmission Settings" interface, you can perform the following operations.

1. Set Video Transmission Mode

The remote controller will receive and display the image in the selected quality.

2. Set Transmission Frequency Band

- Auto: The legal transmission frequency band is automatically selected for Video Transmission between the aircraft and the remote controller.
- 2.4G: The 2.4 G frequency band is used for Video Transmission between the aircraft and the remote controller.
- 5.8G: The 5.8 G frequency band is used for Video Transmission between the aircraft and the remote controller.

3. Set Full Screen Effect

- Fit the screen: In full-screen mode, the Video Transmission screen is stretched to cover the screen.
- Original Ratio: In full-screen mode, the Video Transmission screen is displayed on the screen in its original proportion.

4. Set Split Screen Effect

- Uniform Scale: In dual-screen mode, the Video Transmission screen is proportionally reduced.
- Fit the screen: In dual-screen mode, the Video Transmission screen is stretched to cover the screen.

Tips

- Video Transmission Mode: “Smooth” means 720P and "HD" means 1080P.
- The flight application will, based on the aircraft’s GNSS positioning information, automatically provide frequency band that complies with the local laws and regulations.
- If the aircraft does not obtain GNSS positioning after being turned on, the Video Transmission frequency band between the aircraft and the RC will be set as “2.4G”.
- In A-Mesh Link mode, the Video Transmission frequency band cannot be set.

■ Aircraft Battery

In the sidebar of the “Settings” interface, tap the "" icon to enter the "Battery Information" interface, you can perform the following operations.

1. View Basic Information of the Smart Battery

View the remaining battery level, cell temperature, output voltage, discharge times of the smart battery and the estimated flight time that the remaining power can support in real time.

2. Set Battery Warning Threshold

- Critically Low Battery Warning: Red status. The adjustable range is from 8% to 25%. If the aircraft's battery level reaches this threshold, a forced landing will be triggered.
- Low Battery Warning: Orange status. The adjustable range is from 8% to 50%. The low battery warning threshold should be at least 5% higher than the critically low battery warning threshold. If the aircraft's battery level reaches this threshold, an auto return will be triggered.

3. Hot Swap Battery

After enabling this function, the smart battery can be hot-swappable without shutting down the aircraft, so you do not need to wait to restart the aircraft.

Tips

- When the output voltage of the smart battery exceeds the normal range, there will be a red warning.
- When the smart battery discharges more than 200 times, there will be a red warning. In this case, you need to replace the battery.

■ Gimbal Settings

In the sidebar of the “Settings” interface, tap the "" icon to enter the "Gimbal Settings" interface, you can perform the following operations.

1. Set Gimbal Pitch Sensitivity

Set the angle at which the gimbal rotates on the pitch axis per second (unit: °/second).

2. Gimbal Calibration

For the detailed calibration, see “2.12.3 Gimbal Calibration” in Chapter 2.

3. Gimbal Adjustment

When the position of the gimbal tilts, tap “Gimbal Adjustment” and tap the buttons under the functions of “Roll”, “Yaw”, and “Pitch” to adjust the gimbal, so that the horizontal and vertical axes on the screen remain aligned to the reference objects on the three-screen Video Transmission screen.

4. Gimbal Parameters Reset

Reset the gimbal to default settings.

⚠ Warning

- When operating the gimbal, please ensure the gimbal protective cover has been removed and there are no obstacles affecting the movement of the gimbal.

Remark

- Network RTK service is not supported in current version.

■ More

In the sidebar of the “Settings” interface, tap the “⊙” icon to enter the "More" interface, you can perform the following operations.

1. Unit Settings

Set "Speed/Distance Units", "Area Units", "Temperature Units", and "Coordinate Format" displayed in Autel Enterprise App.

2. Light Settings

- Turn On/Off Stealth Mode
  - If stealth mode is turned on, the strobe and auxiliary bottom light of the aircraft will be turned off by default.
  - If stealth mode is turned off, you can configure the strobe and auxiliary bottom light.
- Set Aux Light
  - If “Auto” is selected, the auxiliary bottom light is automatically turned on or off according to ambient brightness.
  - If "On" is selected, the auxiliary bottom light is always on by default.
  - If "Off" is selected, the auxiliary bottom light is off by default.

3. Turn On/Off Visual Positioning

- If the visual positioning function is turned on, the aircraft will hover in a place with a poor GNSS signal.

4. Turn On/Off GNSS

- If "Auto" is selected, the aircraft will automatically select the best GNSS positioning signal.
- If "Beidou" is selected, the aircraft will only receive GNSS positioning signals from the BeiDou Navigation Satellite System.

5. Emergency Stop Propellers During Flight

- If "Off" is selected, the "Emergency Stop Propellers During Flight" function will be disabled.
- If "On" is selected, you can stop the propellers of the aircraft from spinning at any time during flight by simultaneously pushing the two command sticks inwards or outwards.

6. Target Recognition Settings

The aircraft supports the recognition of “Human”, “Vehicle“, “Boat” and “Smog/fire”, and the user can set the type of recognition. Turn on the sound alert function, the aircraft will give a sound alert when it recognizes a target.

7. Remote ID

Input pilot registration number according to the local (outside mainland China) laws and regulations. For more information, see "2.1 Legal Use Notice" in Chapter 2. After the input, the broadcast status of the Remote ID will display.

8. Language Settings

After selecting the appropriate language, the Autel Enterprise App will automatically restart and display in the chosen language.

9. Quick Operation

"Toolbar" and "Floating Ball" for quick operation are supported. After selecting one of them, the corresponding shortcut function icon will display.

10. About

You can view the firmware version and the serial number of the aircraft, remote controller, gimbal, and battery, as well as the version of the Autel Enterprise App. Upgrade detection for application and firmware are also supported.

Tips

- The auxiliary bottom light is mainly used to enhance the ambient brightness of the landing point during the landing of the aircraft, improve the sensing performance of the downward visual obstacle avoidance sensing system, and ensure landing safety.
- To enter visual positioning mode, the aircraft must turn on visual positioning. For more information, see "3.9.1 Flight Status" in Chapter 3.
- Once the drone completes the UOM real - name registration and activation upon its first startup within the territory of Chinese mainland, the Remote ID broadcasting will be automatically turned on. And each time the drone is started, the flight dynamic data will be automatically reported to the UOM platform.

Warning

- Turning on the stealth mode may violate local laws and regulations. Only turn on the mode when necessary.
- Before the aircraft takes off, if the visual positioning of the aircraft is turned off, do not turn on the visual positioning function after the aircraft takes off, otherwise visual positioning failure may be incurred. If you need to turn on the visual positioning function again, it is recommended to land the aircraft before performing relevant operations.
- When GNSS positioning fails, the aircraft will enter the visual positioning mode if the ambient lighting and surface texture meet the requirements.
- When GNSS positioning fails, and the ambient lighting and surface texture do not meet the requirements, the aircraft will enter the ATTI mode. In this mode, using the aircraft has high safety risks and can easily lead to flight accidents.
- After switching the navigation mode, the mode will take effect after restarting the aircraft.
- Please use the "Emergency Stop Propellers During Flight" function with caution. Once the propellers stop, the aircraft will fall freely without control. This function is only used to reduce additional harm or damage caused by aircraft malfunctions. Please stay away from crowds or buildings when using this function.
- After the "Emergency Stop Propellers During Flight" function is enabled, please stop using the aircraft and contact Autel Robotics to inspect the power system of the aircraft.

6.6 Attitude Ball

In Single Link, or when you tap an aircraft in the team in A-Mesh Link mode, the attitude ball of the aircraft will display at the lower right corner of the interface.
The attitude ball is mainly used to dynamically display the relative positions of the aircraft, remote controller, and home point, and display the relevant attitude, flight speed, battery level, the duration of flight, and other flight safety data of the aircraft. Any changes in the aircraft's status will be reflected in the attitude ball.

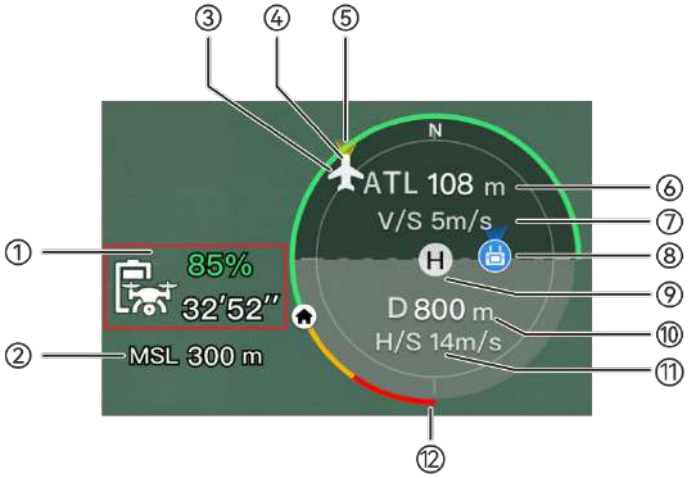

Fig 6-6 Attitude Ball

Table 6-5 Attitude Ball Details

No.	Description	Description
1	Estimated Remaining Flight Time of the Aircraft	Displays the current remaining battery level and estimated remaining flight time of the aircraft.
2	MSL Altitude	Refers to the current altitude of the aircraft relative to the mean sea level (MSL).
3	Aircraft Position	Displays the current position of the aircraft, which can help you observe the approximate position between the aircraft and the remote controller.
4	Aircraft Heading	Displays the current nose orientation of the aircraft. If the aircraft is no longer visible in the line of sight, the aircraft can be controlled to return to the home point based on the position and heading of the aircraft.
5	Gimbal Direction	Displays the current gimbal orientation of the aircraft.
6	Vertical Altitude	Refers to the current vertical altitude of the aircraft relative to the take-off point.
7	Vertical Speed	Refers to the current vertical flight speed of the aircraft.

8	Remote Controller Location	Displays the current position of the remote controller, which can help you observe the approximate position between the aircraft and the remote controller.
9	Home Point	Refers to the set home point of the aircraft.
10	Horizontal Distance	Refers to the current horizontal distance from the aircraft to the home point.
11	Horizontal Speed	Refers to the current horizontal flight speed of the aircraft.
12	Aircraft Battery	Displays the real-time remaining battery level of the aircraft in the dynamic circular battery bar.

6.7 "Map" Interface

When the Autel Enterprise App is in split-screen mode, tap the "◪" icon in the corner of the "Map" split-screen interface, or tap the "Map" mini window at the lower-left corner after entering the "Zoom Camera" interface, "Infrared Camera" interface, "Night Vision Camera" interface, or "Wide Angle Camera" interface, to enter the "Map" full-screen interface.

Fig 6-7 "Map" Interface

Table 6-6 Interface Button Details

No.	Icon	Name	Description
1		Search Map	When the remote controller is connected to the Internet, tap this icon and enter POI or latitude and longitude. According to what you enter, the “Map” interface will switch to the map of the corresponding position.
2		Map Management	When the remote controller is connected to the Internet, tap this icon allows for relevant settings on Map Display, Map Type, and Offline Map: ➢ In the Map Display settings section, you can enable/disable geofence display and show/clear the flight path. ➢ In the Map Type settings section, you can select the map data source (optional: MapBox or MapTiler) and the map layer display style (optional: Normal or Hybrid), and import geofence files. ➢ In the Offline Map management section, you can download offline maps for specified areas, with support for map layer settings and offline map deletion.
3		Orientation Lock	This icon indicates that the display direction of the map is locked. When the remote controller is rotated, the display direction of the map will not change accordingly. Tap this icon to unlock the display direction of the map displayed in the current remote controller.
4		Orientation Unlock	This icon indicates that the display direction of the map is unlocked. When the remote controller is rotated, the display direction of the map will change accordingly. Tap this icon to lock the display direction of the map displayed in the current remote controller.
5		Overview	Tap this icon to simultaneously locate the positions of the remote controller, the home point, and the aircraft on the map.
6		Remote Controller Location	Tap this icon to locate the position of the remote controller on the map.
7		Home Point Location	Tap this icon to locate the position of the home point on the map.

8		Aircraft Position	Tap this icon to locate the position of the aircraft on the map.
9		Recenter	If you move from the current positioning point to a different location on the map, this icon will appear on the right side of the screen. Tap this icon, and the map will quickly return to the current positioning point.
10		Aircraft Search	When the aircraft is lost, you can tap this icon to query the location information of the lost aircraft.

6.8 Camera Interfaces

6.8.1 Camera Function Access

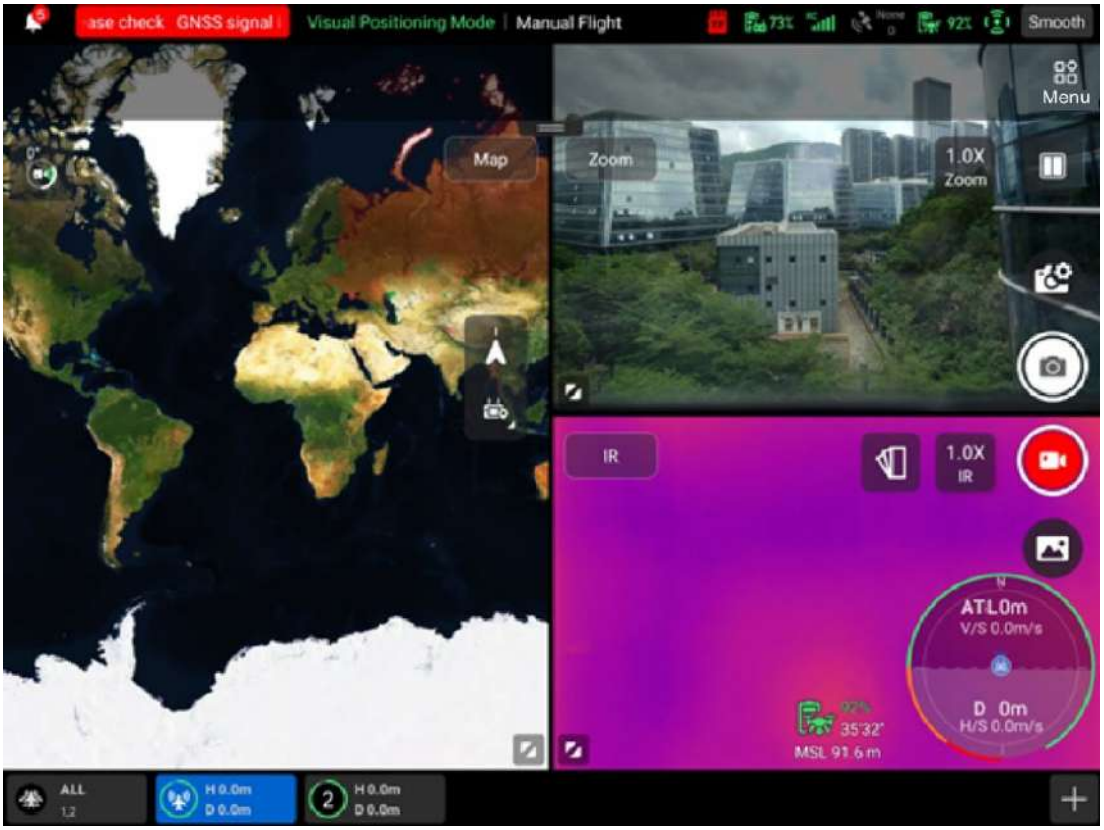

Fig 6-8 Camera Function Access (Fusion 4T V2 gimbal and Three-Screen Mode)

Table 6-7 Camera Menu Details

No.	Icon	Meaning	Description
1	Zoom	Switch to Zoom Camera	On any camera full screen interface, tap this icon to enter the zoom camera interface.
2	IR	Switch to Thermal Camera	On any camera full screen interface, tap this icon to enter the thermal camera interface.

3	Wide	Switch to Wide-angle camera	On any camera full screen interface, tap this icon to enter the wide-angle camera interface.
4	NV	Switch to Night Vision Camera	On any camera full screen interface, tap this icon to enter the night vision camera interface.
5		Camera Settings	Tap this icon to view and set parameters related to the gimbal camera.
6		Photo	Tap this icon to take a photo.
7		Video	Tap this icon to start/end recording.
8		Album	Tap this icon to view photos and videos from the drone's album and the local album and download or delete them.
9	Zoom 1.0X	Zoom Camera Zoom	On the "Zoom Camera" interface, tap this dynamic icon to adjust the zoom factor of the zoom camera.
10	IR 1.0X	Thermal Camera Zoom	On the "Thermal Camera" interface, tap this dynamic icon to adjust the zoom factor of the infrared thermal imaging camera.
11	Wide 1.0X	Wide-angle camera Zoom	On the "Wide-angle camera" interface, tap this dynamic icon to adjust the zoom factor of the wide-angle camera.
12	NV 1.0X	Night Vision Camera Zoom	On the "Night Vision Camera" interface, tap this dynamic icon to adjust the zoom factor of the night vision camera.
13		Linked Zoom	Tap this icon to adjust the zoom factor of any camera, and other cameras will also adjust their zoom factors simultaneously, resulting in the synchronous enlargement or reduction of camera images. Fusion 4T V2 gimbal: ➢ The zoom camera needs to be adjusted to 1.8x before the thermal camera starts to zoom synchronously. Fusion 4N V2 gimbal: ➢ The wide-angle camera needs to be adjusted to 2.2x before the thermal camera starts to zoom synchronously; ➢ The wide-angle camera needs to be adjusted to 2.4x before the night vision camera starts to zoom synchronously;

			➢ The wide-angle camera can be adjusted to a maximum of 16x, the thermal camera can be zoomed synchronously up to 3.9x, and the night vision camera can be zoomed synchronously up to 3.6x. Fusion 4NZ-L V2 gimbal: ➢ The wide-angle camera needs to be adjusted to 2.2x before the thermal camera starts to zoom synchronously.
14	0°	Gimbal 0°	Tap this icon, and the gimbal returns to the horizontal centering state.
15	45°	Gimbal 45°	Tap this icon, and the gimbal rotates obliquely downward, forming an angle of 45° with the horizontal direction.
16	90°	Gimbal 90°	Tap this icon, and the gimbal rotates directly downward, forming an angle of 90° with the horizontal direction.
17		Thermal Color	Tap this icon, and the drop-down list of “Thermal Color” pops up. You can scroll up and down in the list to select a color palette.
18	-20-150 Mode	Radiometric Measurement Mode	High gain mode (-20℃ to 150℃), which enables more accurate radiometric measurement. In “IR” camera interface, tap this icon to switch to low gain mode. This icon is displayed when Temperature Measurement function is turned on.
19	0-550 Mode	Radiometric Measurement Mode	Low gain mode (0℃ to 550℃), which has a larger radiometric measurement range. In “IR” camera interface, tap this icon to switch to high gain mode. This icon is displayed when Temperature Measurement function is turned on.
20	FFC	FFC Calibration	Flat-Field Calibration. In “IR” camera interface, tap this icon to perform calibration. After calibration, the image quality of thermal imaging will be optimized, and temperature changes will be easier to observe. This icon is displayed when Temperature Measurement function is turned on.

■ Camera Settings

On any camera interface, tap the "" icon to enter the "Camera Settings" interface. On the interface, you can perform the following operations:

1. General Camera Setting

Tap the "" icon to perform general camera settings:

- Select Shooting Camera: After a lens is selected, when you tap the "📷" or "🎥" icon, the selected lens will simultaneously take photos or record videos. For the unselected lenses, the shooting function will be unavailable.
- Set Video Encoding: Video encoding options are H.264 and H.265, and H.264 is default.
- View Video Format
- Set Grid: Used to support picture composition during shooting. You can select one or more grid types.
  - ➢ When multiple grid types are selected, the grids will be superimposed and displayed on all camera interfaces.
- Set Defog: Used to eliminate the "fog" in the picture or to avoid the lack of picture clarity caused by smog.
  - ➢ The higher the set defog intensity level, the darker the image.
- Turn On/Off Stamps/Subtitles
  - ➢ Once this function is enabled, the captured images will include the set stamp.
- Turn Off Arm Lights when Shooting
  - ➢ If this function is turned on, the aircraft's arm lights will be turned off when the gimbal is shooting.
- Turn On/Off Pre-recording
  - ➢ If this function is turned on, the aircraft will start recording 30 seconds ~ 1 minute in advance (tap the "🎥" icon) and save the video.
- Turn On/Off Histogram: The histogram can display the distribution of pixels in the images captured by the camera, thereby reflecting the exposure of the images.
  - ➢ If the histogram function is turned on, a floating "Histogram" window will be generated on the screen of the remote controller, and you can drag the "Histogram" window to any area on the screen. Tap the "Close" button in the upper-right corner of the window to turn off the histogram function.
- Set Storage Location: You can choose "SD Card" or "Internal Storage" as the image path. Also, you can format the corresponding storage path.
- Reset Camera Parameters: Restore the camera parameters to default settings.
- View Camera Model: View the gimbal camera model.

2. Zoom Camera Setting

Tap the "" icon to view the resolution & frame rate of zoom videos, and set the size & format of zoom photos.

3. Wide Angle Camera Setting

Tap the "" icon to view the format of wide angle photos and the resolution & frame rate of wide angle videos. You can also set the size of zoom photos. Wide angle photo size options are 12M and 50M. Wide angle video format options are JPG and DNG.

4. Night Vision Camera Setting

Tap the "" icon to view the size & format of night vision photos, and the resolution & frame rate of night vision videos.

5. Infrared Camera Setting

Tap the " IR " icon to view the size & format of infrared photos and the resolution & frame rate of infrared videos. You can also set Image Mode, turn on/off Image Enhancement and turn on/off Temperature Measurement.

- Set Image Mode

Two image modes are available, that is, “Manual” and “Auto”.

  - ➢ If the “Manual” mode is set, you can adjust the "Contrast" and "Brightness" below.
- Turn on/off Image Enhancement

- ➢ If this function is enabled, the image quality can be improved, and you can adjust the image enhancement effect within the range of 1 to 10.
- Turn On/Off Temperature Measurement
  - ➢ If this function is turned on, you can set isotherm, emissivity, and alarm.
  - ➢ If this function is turned off, both " Temperature Measurement Mode" and "FFC" cannot be set.

Tips

- When the “Night Mode” function is turned on, the resolution of the video recorded with the “Wide-angle” camera will be reduced.
- The pre-recording function can prevent missing important shots when the aircraft is flying rapidly. The pre-recorded videos will be saved in the "PreRecorder" folder in the remote controller's root directory.

6.8.2 Camera Switch and Operation

■ Camera Switch

- In the Autel Enterprise App, tap the " " icon in the corner of the "Zoom Camera" spilt-screen interface, or tap the "Zoom" icon on the left side after entering the "Infrared Camera" full-screen interface, to enter the "Zoom Camera" full-screen interface.
- In the Autel Enterprise App, tap the " " icon in the corner of the "Infrared Camera" spilt-screen interface, or tap the "IR" icon on the left side after entering the "Zoom Camera" or “Night Vision Camera” or “Wide Angle Camera” full-screen interface, to enter the "Infrared Camera" full-screen interface.
- In the Autel Enterprise App, tap the " " icon in the corner of the "Night Vision Camera" spilt-screen interface, or tap the "NV" icon on the left side after entering the "Wide Angle Camera" or “Infrared Camera” full-screen interface, to enter the "Night Vision Camera" full-screen interface.
- In the Autel Enterprise App, tap the " " icon in the corner of the "Wide Angle Camera" spilt-screen interface, or tap the "Wide" icon on the left side after entering the "Night Vision Camera" or “Infrared Camera” full-screen interface, to enter the "Wide Angle Camera" full-screen interface.

Tips

- For the aircraft equipped with a Fusion 4T V2 gimbal, the “zoom” camera interface and “Thermal” camera interface can be displayed after the aircraft is connected to remote controller.
- For the aircraft equipped with a Fusion 4N V2 gimbal, the “Wide-angle” camera interface, “Night Vision” camera interface and “Thermal” camera interface can be displayed after the aircraft is connected to remote controller.
- For the aircraft equipped with a Fusion 4NZ-L V2 gimbal, the “Night Vision” camera interface and “Thermal” camera interface can be displayed after the aircraft is connected to remote controller.

■ "Zoom" Camera Operations

1. Adjust the Zoom Factor

When shooting, tap the "Zoom 1.0X" dynamic icon, and the zoom factor setting window will pop up. A maximum of 160x hybrid zoom is supported. You can set zoom factor according to your needs to zoom in or out the image to be captured by the zoom camera to flexibly shoot near or far objects.

2. Camera Settings

Tap the "" icon to enter the "Camera Settings" interface and perform relevant settings. For more information, see "6.8.1 Camera Function Access" in this chapter.

■ "Infrared Camera" Operations

1. Set Thermal Color

After tapping the "" icon, you can scroll up and down in the pop-up drop-down list to select a color palette.

- After selection, the images captured by infrared camera will be displayed in the color style of the selected color palette.

2. Set Infrared Shooting

Tap the "" icon to enter the "Camera Settings" interface and perform relevant settings. For more information, see "6.8.1 Camera Function Access" in this chapter.

3. Set Temperature Measurement Mode

Tap the "-20-150 Mode" icon or the "0-550 Mode" icon to switch between temperature measurement modes.

- High gain mode (-20°C to 150°C): This mode has higher temperature measurement accuracy but a smaller temperature measurement range compared with the low gain mode.
- Low gain mode (0°C to 550°C): This mode has a larger temperature measurement range but lower temperature measurement accuracy compared with the high gain mode.

4. FFC Calibration

Tap the "FFC" icon to enable the FFC calibration function.

5. Adjust the Infrared Zoom Factor

While shooting, tap the "IR 1.0X" dynamic icon, and the infrared zoom factor setting window will pop up. You can set zoom factor according to your needs to zoom in or out the image to be captured by the infrared camera to flexibly shoot near or far objects.

Tips

- The temperature measurement mode and FFC calibration functions can be used only after the infrared radiometric measurement function is enabled in the camera settings.
- The thermal cameras of Fusion 4T V2 gimbal and Fusion 4N V2 gimbal support up to 16x digital zoom.

Warning

- While shooting, do not aim the infrared thermal imaging camera at strong energy sources such as the sun, lava, laser beams, and molten metal, to avoid damaging the infrared detector.
- The temperature of the measured target should be within 600℃. Over-temperature measurements can cause burns and damage to the infrared detector.

■ “Night Vision Camera” Operations

1. Adjust the Night Vision Zoom Factor

While shooting, tap the "NV 1.0X" dynamic icon, and the night vision zoom factor setting window will pop up. A maximum of 8x digital zoom is supported. You can set zoom factor according to your needs to zoom in or out the image to be captured by the night vision camera to flexibly shoot near or far objects.

2. Camera Settings

Tap the "" icon to enter the "Camera Settings" interface and perform relevant settings. For more information, see “6.8.1 Camera Function Access” in this chapter.

■ “Wide Angle Camera” Operations

1. Adjust the Wide Angle Zoom Factor

While shooting, tap the "Wide 1.0X" dynamic icon, and the wide angle zoom factor setting window will pop up. A maximum of 8x digital zoom is supported. You can set zoom factor according to your needs to zoom in or out the image to be captured by the wide angle camera to flexibly shoot near or far objects.

2. Camera Settings

Tap the "" icon to enter the "Camera Settings" interface and perform relevant settings. For more information, see “6.8.1 Camera Function Access” in this chapter.

6.9 Flight Missions

The drone supports flight mission planning. Flight missions are divided into waypoint missions, and polygon missions in terms of type. You can tap the corresponding icon in the toolbar or “Menu” to enter the relevant mission editing interfaces.

Important

- If any of the following conditions are detected, the drone will end the flight mission automatically, and the drone will perform other operations according to the following conditions:
  - Drone low battery power: A notification will pop up on the flight application to inform you that the drone will return to the home point automatically.
  - Drone critically low battery power: The drone will end its mission and automatically land at its current position.
  - During a flight mission, if the remote controller is powered off, the drone will execute the signal loss that you set.

Tip

- When the drone is in visual positioning mode or attitude mode, it cannot execute a flight mission (waypoint missions or polygon missions).

6.9.1 Waypoint Mission

In the toolbar (or Menu), tap the "" icon to enter the "Waypoint" mission interface.

You can add multiple waypoints on the map. Every two neighboring waypoints connect to form a flight segment and one or more flight segments form a route. After the flight altitude, flight speed, camera action, and waypoint actions of each waypoint for each route and each waypoint are set, the drone will automatically fly the route and perform corresponding actions at each waypoint.

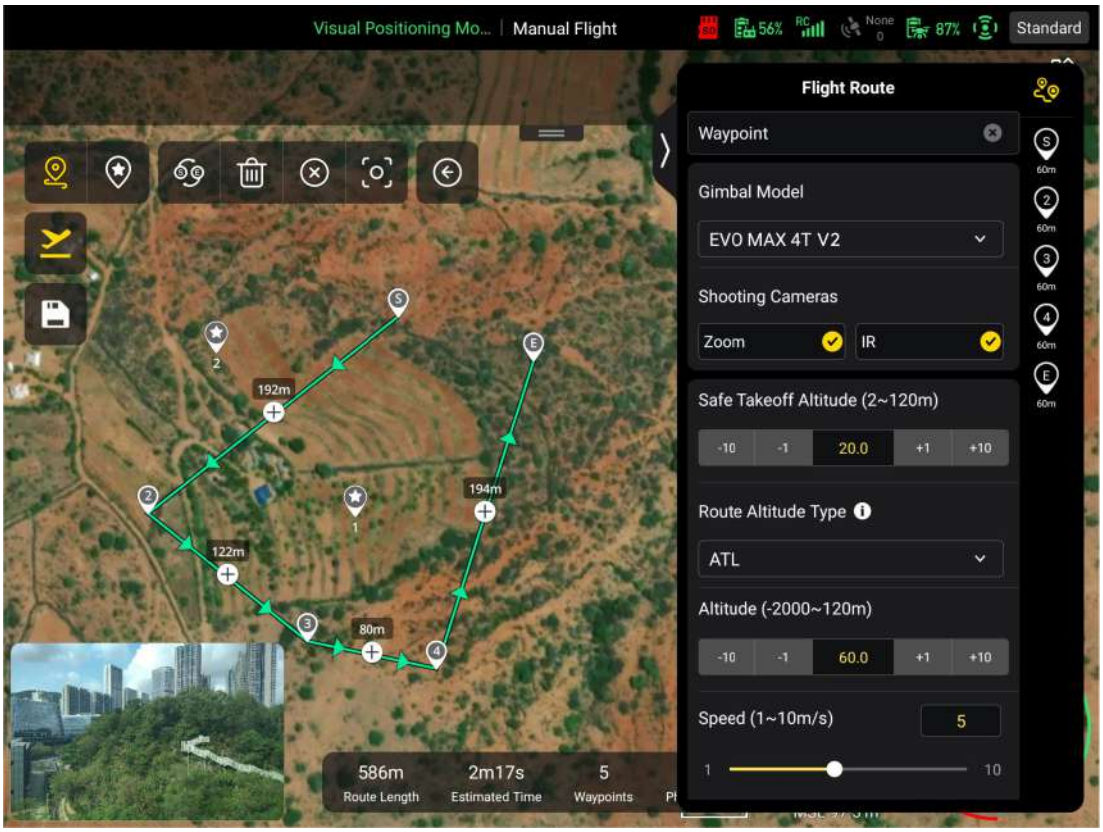

Fig 6-9 Waypoint (before taking off)

Table 6-8 "Waypoint Mission" Terms and Details

Term	Definition
Above Takeoff Level (ATL)	Refers to the vertical height of the drone relative to the take-off point.
Mean Sea Level (MSL)	Refers to the vertical height of the drone relative to sea level.
Yaw Angle	Refers to the angle at which the drone's nose deviates from the north. The default is to follow the route. When the point of interest has been added, it is often set in conjunction with the point of interest, that is, the yaw angle of the drone is set to turn to the point of interest.
Gimbal pitch	The observable range of the gimbal, that is, the angle from the top to the bottom.
Gimbal Yaw Angle	Refers to the angle between the gimbal on the yaw axis and the north.

Finish Action	Refers to the actions that the drone will perform after finishing the waypoint mission.
Signal Loss Action	Refers to the actions that the drone will perform when the flight application displays a warning saying “Aircraft disconnected.” during flight.
Waypoint Action	Refers to the actions performed by the camera, the gimbal, and the drone at a specific waypoint.
Coordinated Turns Radius	After it is set, the drone will switch from the current segment to the next segment with set turn radius before arriving at the next waypoint.

Table 6-9 "Waypoint Mission" Icons and Details

No.	Icon	Meaning	Description
1		Waypoint Settings	Tap this icon to add a waypoint on the map as needed. Every two neighboring waypoints connect to form a flight segment, and one or more flight segments form a route.
2		POI Settings	Tap this icon to add a point of interest on the map as needed.
3		Heading Switch	Tap this icon, the whole route will be reversed.
4		Delete	In waypoint setting, tapping this icon once can delete the latest waypoint but cannot delete points of interest. In POI setting, tapping this icon once can delete the latest point of interest but cannot delete waypoints.
5		Route Centering	Tap this icon, the route will be displayed in the center of the “Map” interface.
6		Exit	Tap this icon to exit the mission editing.
7		Clear	Tap this icon, then tap the "Confirm" button to clear all waypoints and POIs.
8		Save Route	Tap this icon, the currently edited waypoint mission will be saved in “Mission”.
9		Edit Route	In mission library, tap this icon to edit the saved waypoint missions.

10		Execute Mission	Tap this button, the aircraft will enter the "Pre-flight Check" interface. After the check is completed, the aircraft will take off to perform the waypoint mission.
11		Pause Mission	When executing a waypoint mission, tap this icon, the aircraft will pause the waypoint mission and hover at the current position.
12		Exit Mission	Tap this icon, the aircraft will abort the current waypoint mission and automatically return.

■ Add Waypoints

Tap the "" icon, find the starting point for the mission on the map and tap it to create the first waypoint, and then repeat the previous operation to create multiple waypoints as required.

- ➢ When you are adding waypoints, the waypoint mission settings interface will pop up on the right side of the waypoint mission interface.

Tips

- A route must include at least two waypoints: a starting point ( ) and an ending point ( ).
- To make waypoint position more precisely, you can enter the waypoint coordinates under "Waypoint Coordinates" on the waypoint settings interface.

■ Route/Waypoint Settings

Tap the "" icon at the upper-right corner of the waypoint settings interface to enter the route settings interface. Tap the waypoint icon on the right side of the waypoint settings interface to enter the corresponding waypoint settings interface.

1. Set Route Name

On the route settings interface, tap the "Route Name" edit box and enter a name to set the name of a route.

2. Choose Gimbal and Shooting Camera

On the route setting interface, tap “Gimbal Model” drop-down list to choose a type of gimbal to execute flight mission; select one or multiple camera type(s) in the “Shooting Cameras” selection list to perform shooting action.

3. Set Safe Takeoff Altitude

On the route settings interface, tap the “Safe Takeoff Altitude(2-800m)” edit box to set the safe taking off height. After the aircraft is turned on and takes off, the aircraft will climb to this altitude and execute flight mission according to the flight altitude set.

4. Set Route Altitude Type

On the route settings interface, tap the drop-down list of "Route Altitude Type" to select “ATL” or “MSL” as the altitude type of the entire route.

5. Set Flight Altitude

- ➢ On the route settings interface, tap the "Flight Altitude" edit box to set the flight altitude of the whole route.

- On the waypoint settings interface, the flight altitude is set to “Align Route” by default. After deselecting “Align Route”, tap the "Flight Altitude" edit box to set the flight altitude of the whole route.

6. Set Flight Speed

- On the route settings interface, tap the “Speed” edit box to set the flight speed value of the whole route.
- On the waypoint settings interface, the flight speed is set to “Align Route” by default. After deselecting “Align Route”, tap the "Speed" edit box to set the flight altitude for the whole route.

Tips

- The maximum value of the flight altitude that can be set will be dynamically adjusted according to the altitude limit set in the "Flight Control Parameter Setting".
- After take-off, the aircraft will gradually adjust its altitude from the set safe takeoff altitude to the set flight altitude during the fight to waypoint.

7. Set Yaw Angle

- On the route settings interface, tap the drop-down list of "Yaw Angle" to set the yaw angle of the aircraft in the entire route. You can select “Route Following”, “Manual”, or “Custom”.
- On the waypoint settings interface, the yaw angle of the aircraft is set to “Align Route” by default. After deselecting “Align Route”, tap the drop-down list of "Yaw Angle" to set the yaw angle of the aircraft at the current waypoint. You can select “Route Following”, “Manual”, “Custom”, or “Turn to Point of Interest” (if the waypoint is associated with the point of interest).

Remarks

- Route Following: the nose of the aircraft will follow the direction of the waypoint.
- Manual: User uses a remote controller to control the nose direction of the aircraft during the flight.
- Custom: the aircraft nose will be adjusted according to the set yaw angle value.
- Turn to Point of Interest: If the yaw angle is set to “Turn to Point of Interest” in a flight segment, the nose of the aircraft will always face the set POI.

8. Set Finish Action

On the route settings interface, tap the drop-down list of "Finish Action" to set the flight action of the aircraft after completing the waypoint mission.

- If “Auto RTH” is selected, the aircraft will automatically return to the set home point after completing the mission.
- If “Hovering” is selected, the aircraft will hover at the end point after completing the mission.

9. Set Signal Loss Action

On the route settings interface, tap the drop-down list of "Signal Loss Action" to set the flight action of the aircraft after losing connection with remote controller.

- If "Continue" is selected, the aircraft will continue to execute the mission and perform the "Finish Action" after completing the mission.

- If “Auto RTH” is selected, the aircraft will automatically return to the set home point.

10. Set Coordinated Turns Radius

On the waypoint setting interface, choose any waypoint except the starting point and the ending point, and set the coordinated turn radius. Tap the “Coordinated Turns Radius” editing box to set the coordinated turn radius of the waypoint selected.

11. Add a Waypoint Action

On the waypoint settings interface, tap the "Add Action +" button under “Waypoint Action” to set “Camera Actions” and “Aircraft Actions” for the current waypoint. You can add a maximum of 10 waypoint actions for one waypoint.

- Camera Actions include “Photo“, ”Directional Photography”, “Start Recording”, “Stop Recording”, “Gimbal pitch angle”, “Gimbal Yaw Angle”, “Zoom”, “Timelapse”, “Distance Lapse”, and “Stop Shooting”.
- Aircraft Actions include “Hovering” and “Aircraft Yaw Angle”.

Remarks

- Timelapse: Take pictures continuously and periodically based on the set "photo interval" time.
- Distance shooting: Take pictures continuously and periodically based on the set "photo distance".

12. Set Waypoint Coordinates

After adding a waypoint, you can automatically obtain the longitude and latitude parameters of the waypoint. You can also manually enter and modify the longitude and latitude of the waypoint.

- Under “Waypoint Coordinates” on the waypoint settings interface, the waypoint coordinates can be set in seven formats: WGS84/DD, WGS84/DMS, WGS84/MGRS, CGCS2000/DD, CGCS2000/DMS, CGCS2000/3-degree and CGCS2000/6-degree. Tap the "Longitude" and "Latitude" edit boxes below and enter the longitude and latitude of the waypoint to complete the modification of the waypoint coordinates.
- When using the WGS84/DD (Decimal Degrees), CGCS2000/DD, CGCS2000/3-degree and CGCS2000/6-degree format, you can use the arrow keys located on the right side of the editing field to make fine adjustments to the longitude and latitude.

■ Add Point of Interest

Tap the "" icon, find the specific location on the map where the POI needs to be set and tap to create the first POI, and then repeat the previous operation to create multiple POIs as required.

- When adding POIs, the POI setting interface will pop up on the right side of the waypoint mission interface.

■ Set POI

1. Set POI Altitude

Set the POI altitude in the “Altitude” editing box.

Tips

- POI altitude refers to the altitude of the point of interest relative to the take-off point.
- When the point of interest is higher than the waypoint, the gimbal cannot face the point of interest above.

2. Set Link Waypoint

Tap the waypoints to be associated under "Link Waypoint(s)" to associate the current point of interest with the selected waypoints.

Tip

- After a waypoint is associated with a point of interest, the yaw angle of the aircraft at the waypoint will not “Align Route” by default. If the “Yaw Angle” of the aircraft is set to “Turn to Point of Interest” in the waypoint setting and the aircraft is executing the waypoint mission, the nose of the aircraft will always face the associated point of interest during the flight segment from the waypoint to the next one.

■ Start Pre-flight Check

After the completion of all the waypoint mission settings, relevant flight mission data will be synchronously displayed at the bottom center of the waypoint mission interface, including the route length, estimated time, waypoints, and photos to be taken. After selecting the aircraft to perform the waypoint mission, tap the “” icon on the left side to enter the "Pre-flight Check" interface.

■ Upload a Route and Start a Mission

After completing the pre-flight check, press the “Slide to takeoff” icon at the bottom of the "Pre-flight Check" interface, and the selected aircraft will automatically take off to execute the mission. The estimated completion time, current photo count, current altitude, current wind speed, and other basic information will be synchronously displayed at the bottom center of the waypoint mission interface. The lower-left small screen displays the current image observed by the gimbal camera. Tap to enlarge it to full screen for viewing.

When the aircraft completes the waypoint mission, the relevant flight mission data of this route will be displayed at the bottom center of the map, including the route length, estimated time, waypoint, the number of photos taken, and the number of flights.

Important

- In current version, in A-Mesh Link mode, only one drone can be selected to execute waypoint mission.

6.9.2 Polygon Mission

In the toolbar (or Menu), tap the "" icon to enter the "Polygon" mission interface.

You can add a square area on the map and perform operations such as dragging, adding side boundaries, and dragging corner points to adjust the position and size of the area. After adjustments, the flight application will automatically generate a continuous series of equidistant flight routes within the polygonal area based on the side overlap and course angle settings. The drone will then automatically fly to execute the shooting mission according to these flight routes and relevant settings.

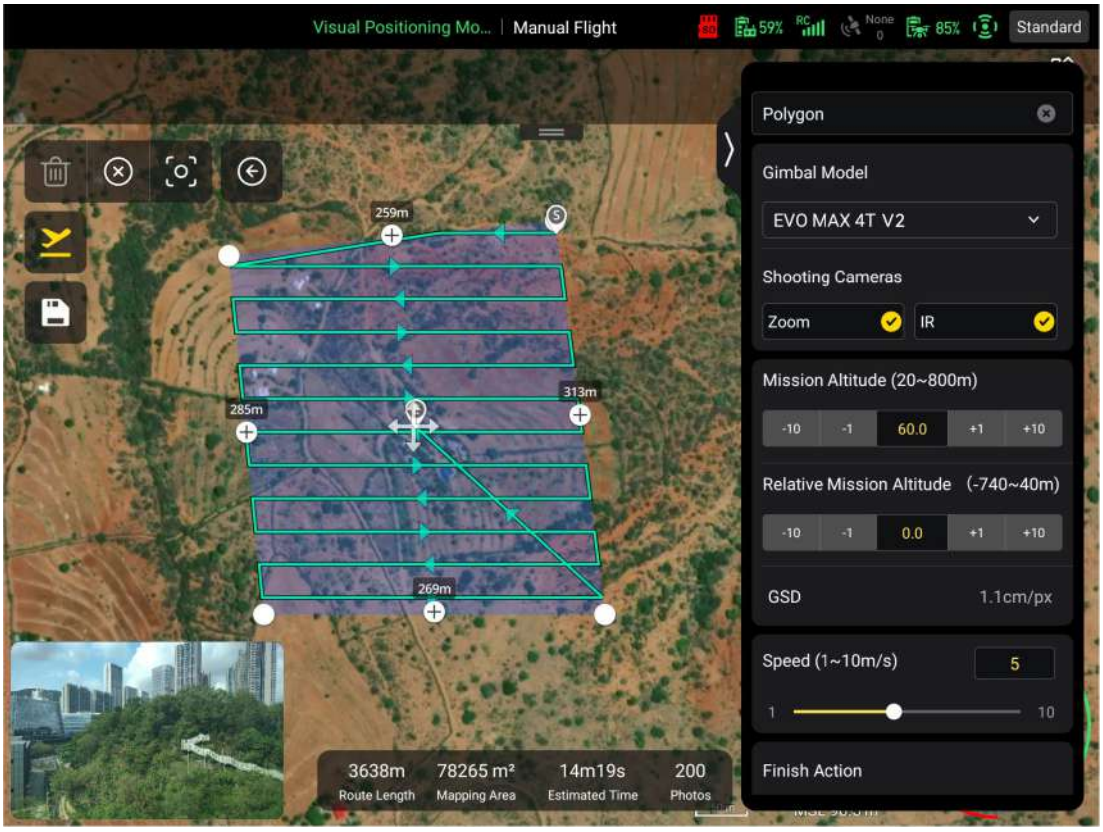

Fig 6-10 Polygon (Before taking off)

Table 6-10 "Polygon Mission" Terms and Details

Term	Definition
Mission Altitude	Refers to the vertical height of the drone relative to the ground of the target measurement area during a mission.
Relative Height	Refers to the vertical height of the drone's take-off point relative to the ground of the target measurement area.
GSD	Ground Sampling Distance.
Finish Action	Refers to the action that the drone will perform after completing a polygon mission.
Signal Loss Action	Refers to the actions that the drone will perform when the flight application displays a warning saying "Aircraft disconnected." during flight.
Front Overlap	Refers to the image overlap rate between two consecutive photos taken along the course.
Side Overlap	Refers to the image overlap rate between two consecutive photos taken along two adjacent flight routes.
Course Angle	Refers to the angle between the main route and the latitude line (horizontal line) when the flight routes are automatically generated.

Gimbal pitch	The observable range of the gimbal, that is, the angle from the top to the bottom.
Coordinated Turns	When this function is enabled, the drone will switch from one main route to an adjacent main route along the optimal arc-shaped path.

Table 6-11 "Polygon Mission" Icons and Details

No.	Icon	Meaning	Description
1		Delete	Tap this icon to delete polygon point selected.
2		Clear	Tap this button, and then tap the "Confirm" button in the pop-up window to reset the polygon mission.
3		Route Centering	Tap this icon and then the route will be displayed in the center of the "Map" interface.
4		Exit	Tap this icon to exit the mission editing.
5		Save Route	Tap this icon, and the currently edited polygon mission will be saved in "Mission".
6		Edit Route	In mission library, tap this icon to edit the saved polygon mission.
7		Execute Mission	Tap this button, and the drone will enter the "Pre-flight Check" interface. After the check is completed, the drone will take off to perform the polygon mission.
8		Pause Mission	When executing a polygon mission, tap this icon, and the drone will pause the polygon mission and hover at the current position.
9		Exit Mission	Tap this icon, and the drone will abort the current polygon mission and automatically return.

■ Add a Polygonal Area

On the map of the polygon mission interface, find the center point of the mission to be executed and tap it to automatically generate a square area. You can tap the "+" icon between two white points to add side lines for the area. You can drag the white points to adjust the positions of the corner points of the polygon, which allows you to modify the area of the polygon. You can also drag the "cross arrow" in the center of the polygonal area to move the polygon.

- When a polygonal area is added, the polygon mission settings interface will pop up on the right side of the polygon mission interface.

Tip

- A polygonal area includes two waypoints, that is, the starting point ( ) and the end point ( ).

■ Mission Setting

1. Set Mission Name

Tap the "Mission Name" editing box to set the name of a polygon mission.

2. Choose Gimbal and Shooting Cameras

Tap “Gimbal Model” drop-down list to choose the model of the gimbal to execute the polygon mission; select one or multiple camera type(s) in the “Shooting Cameras” selection list to perform shooting action.

3. Set Mission Altitude and Relative Mission Height

- Tap the "Mission Altitude (20-800m)" editing box and set the mission altitude of the polygon mission.
- The setting range of "Relative Mission Height" will automatically be dynamically adjusted according to the flight altitude value set. Tap the “Relative Height (-740-40m)” editing box to set the relative altitude of the polygon mission.

Tips

- The maximum value of the mission altitude that can be set will be dynamically adjusted according to the altitude limit set in the "Flight Control Parameter Setting".
- GSD varies with different flight altitude values.

4. Set Flight Speed

Tap the "Speed" editing box and set the flight speed of the polygon mission.

5. Set Finish Action

Tap the drop-down list of "Finish Action" to set the flight action of the aircraft after completing the polygon mission.

- If “Auto RTH” is selected, the aircraft will automatically return to the set home point after completing the mission.
- If “Hovering” is selected, the aircraft will hover at the end point after completing the mission.

6. Set Signal Loss Action

Tap the drop-down list of "Signal Loss Action" to set the flight action after the aircraft disconnects with the remote controller.

- If "Continue" is selected, the aircraft will continue to execute the mission and perform the "Finish Action" after completing the mission.
- If “Auto RTH” is selected, the aircraft will automatically return to the set home point.

7. Advanced Settings

Tap “Advanced” to enter the advanced settings interface and set the front overlap, side overlap, main course angle, and gimbal pitch angle for the polygon mission.

- If “Custom” is selected for “Course Angle”, you can adjust the angle between the main route of the polygon mission and the latitude line.

Tip

- The setting range of front overlap is 10%-90%, and the setting range of side overlap is 0%-90%, and the default value of both is 70%.

8. Turn On/Off Elevation Optimization

- If this function is turned on, the aircraft will create a route along the center point of the polygon for re-shooting after completing the shooting of the main route. This helps optimize the overall shooting accuracy of the mission.

9. Turn On/Off Double Grid

- If this function is turned on, the aircraft will turn its head 90° and shoot the polygon mission area again after completing the shooting of the main route. The two routes will overlap at 90°.

10. Turn On/Off Route Extension

Due to the limited gimbal pitch angle and flight altitude, some areas on the outer edges of the polygon mission area might not be captured by the camera. In such cases, you need to turn on route extension to extend the polygon mission area so as to ensure complete coverage of the target area.

11. Turn On/Off Coordinated Turns

After this function is turned on, the aircraft will make turns following the optimal arc-shaped path when switching from one main route to an adjacent one.

Tip

- In high-altitude missions, if there are no obstacles, it is recommended to set the obstacle avoidance mode to "Turn off".

■ Start Pre-flight Check

After the completion of all the polygon mission settings, relevant flight mission data will be synchronously displayed at the bottom center of the polygon mission interface, including the route length, mapping area, estimated time, and photos to be taken. After selecting the aircraft to perform the polygon mission, tap the "" icon on the left side to enter the "Pre-flight Check" interface.

■ Upload a Route and Start a Mission

After completing the pre-flight check, press the "Slide to takeoff" icon at the bottom of the "Pre-flight Check" interface, and the selected aircraft will automatically take off to execute the mission. The estimated completion time, current photo count, current altitude, current wind speed, and other basic information will be synchronously displayed at the bottom center of the polygon mission interface. The lower-left small screen displays the current image observed by the gimbal camera. Tap to enlarge it to full screen for viewing.

When the aircraft completes the polygon mission, the relevant flight mission data of this route will be displayed at the bottom center of the map, including the route length, mapping area, estimated time, the number of photos taken, and the number of flights.

Important

- In current version, when a polygon mission needs to be performed in A-Mesh Link mode, you can select either one drone or all drones (**ALL** is selected) in the team to perform the mission. If all drones in the team are selected to execute the mission, each drone will execute one part of the polygon mission.

6.9.3 Pre-Flight Check

Before the aircraft starts to execute a mission, a pre-flight check is required. On the "Pre-flight Check" interface, you can preview the current status (such as flight mode, battery level, battery temperature, and storage) and route data of the aircraft and perform quick settings such as flight parameters, stick mode and obstacle avoidance settings.

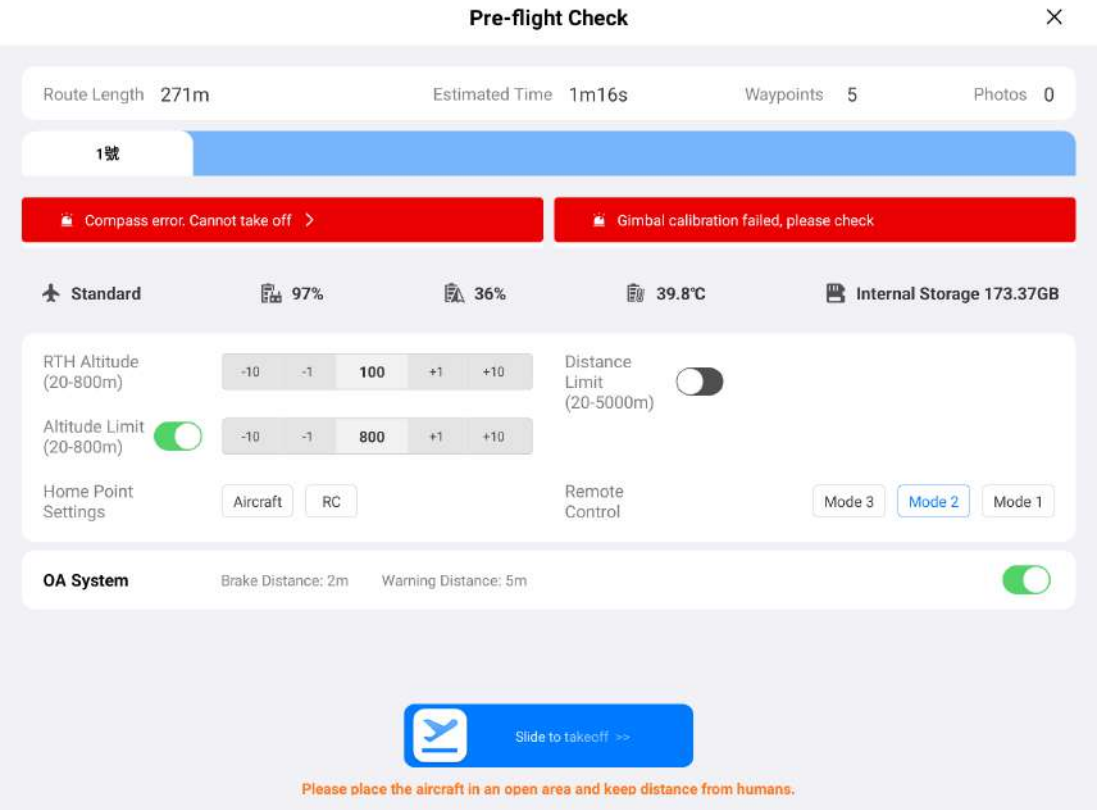

Fig 6-11 Pre-flight Check for a Flight Mission

1. On the interface of the flight mission to be executed, after selecting the aircraft that executes the mission, tap the "" icon on the left, the "Pre-flight Check" interface will pop up. Please make sure that there is no fault or abnormal alarm, otherwise, you need to follow the tips to solve it.
2. Confirm aircraft status and route preview data.
3. According to different types of flight missions, check and set appropriate flight parameters.
4. Choose appropriate stick modes and select to enable or disable obstacle avoidance as required.
5. After completing the above operations, press the “Slide to takeoff” icon at the bottom of the interface.

⚠ Warning

- Before executing the aircraft takeoff in A-Mesh Link mode, you should strictly ensure that the horizontal distance between the aircrafts on the ground is at least 5 meters, and the user needs to stand at least 10 meters away from the tails of all aircrafts. If you do not maintain a safe distance as required, the aircrafts may get close to people and cause injuries when automatically adjusting distance after taking off.

6.9.4 Resume Mission

When an abnormal situation such as an abnormal exit occurs during a flight mission, tap the " " icon to enter the "Mission" interface. This will trigger the “Resume Mission” function, and a prompt window will pop up.

■ Resume Mission Options

- Tap the "Continue" button. The position where the drone stopped will be displayed, and the drone will fly to this position to continue the last mission.
- Tap the "Cancel" button. After closing the pop-up window, the mission will no longer be executed from the last point.

6.9.5 Geofence

In Single Link mode, click the “ ” icon in the toolbar (or Menu), you can enter the geofence interface.

You can add a circle or polygon on the map, adjust the circle radius or polygon shape, and configure the valid period and buffer distance in the “Edit Geofence” interface to generate a customized no-fly zone or customized geofence.

- Customized No-Fly Zone: the aircraft cannot fly into the zone during the valid period.
- Customized Geofence: the aircraft can fly inside the geofence during the valid period while it is forbidden to fly outside the geofence.

Tips

- In A-Mesh Link mode, the Geofence icon is displayed in grey, and cannot be clicked.
- For the detailed description about geofence restrictions, please refer to ”2.10 Flight Restrictions and Unlocking Restricted Zones” in Chapter 2.

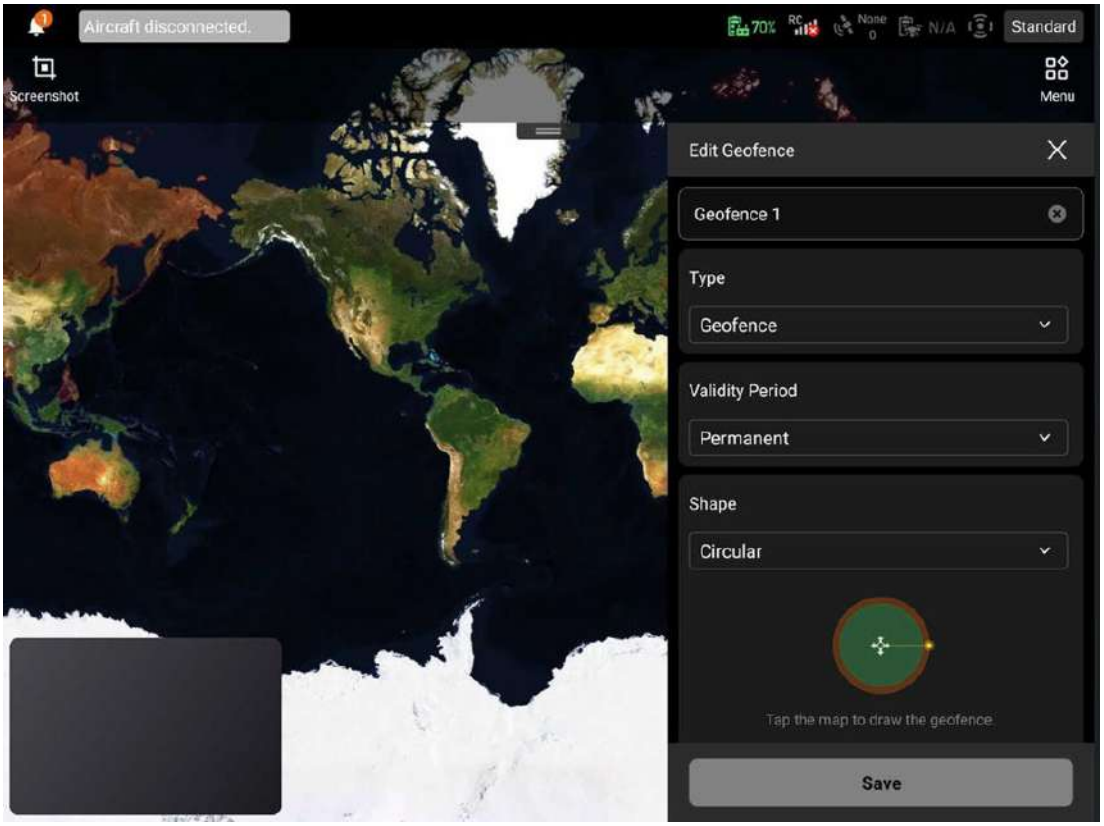

Fig 6-12 Geofence (Edit Geofence Interface)

■ Add Area

Find the center point of the geofence on the map, click it to automatically generate a geofence area, and drag the "cross arrow" at the center point of the area to quickly move the location of the area.

- If the area is a circle, you can adjust the radius of the area by dragging the yellow point on the circle.
- If the area is a polygon, you can click the "+" icon between the two vertices of the polygon to add new edges to the area, and drag the vertices to adjust the position of the vertices on the map, so as to adjust the area of the polygon.

Tips

- When customizing a geofence, the green area is a no-fly zone and the orange area is a buffer zone and is inside the geofence.
- When customizing a no-fly zone, the red area is a no-fly zone and the orange area is a buffer zone and located outside the no-fly zone.

■ Geofence Setting

In the "Edit geofence" interface, you can perform the following operations:

1. Input geofence name

Click the name editing box to set geofence name.

2. Select the type of geofence.

Click the "Type" drop-down list to set the type of geofence. You can select "Geofence" or "No Fly Zone".

3. Validity Period Setting
Click “Validity Period” drop-down list to set the validity period of the geofence. You can select “Permanent” or “Temporary”.

- If you select “Temporary”, you need to set the start time and end time of the validity period, accurate to hour/minute.

4. Shape Setting
Click “Shape” drop-down list to set the shape of the geofence area. You can select “Circle” or “Polygon”.

Tip

- If the shape of geofence area is different, the parameters of the area to be configured may differ. Please refer to the actual operation.

6.9.6 Other Functions

Users can enable the following functions by tapping the corresponding function icon in the toolbar or “Menu”. Please refer to "6.4 Toolbar" in this chapter for details.

■ Formation Flight

Enable this function to control the other aircrafts in the team to fly in formation with the relay aircraft in the same direction in A-Mesh Link mode.

- To execute formation flight, you must select at least two aircrafts (including the relay aircraft) to take off and maintain a flight altitude of at least 30 meters above the ground before enabling this function.
- After executing the formation, the controlled aircraft (not the relay aircraft) will fly to the relay aircraft according to the set horizontal interval (at least 10 meters by default), and its gimbal angle and flight heading will also be adjusted to be consistent with the relay aircraft synchronously.

Important

- When executing formation flight, please always pay attention to the quality of the Video Transmission signal between the relay aircraft and the remote controller. When the Video Transmission signal is poor, decrease the flight radius in a timely manner.

■ Record

The function is used to record the operation process of mission execution, and to facilitate the next repeated execution of the relevant mission.

- After the record function is enabled, user needs to control the aircraft to execute a mission once successfully, including controlling the aircraft to the mission point, and manually controlling the gimbal angle and taking pictures.
- After the mission is completed, end the recording. The mission will be automatically generated in the mission library. User can choose to execute the mission to repeat the operation.

■ Quick Mission

Quick missions belong to temporary missions. During the flight, when user enables the quick mission, they can mark a quick mission point on the map interface, and make the aircraft execute

"Direction" and quickly fly to the mission point.

■ Orbit

After Orbit is enabled, the drone will take the current position as the center point of circle, automatically fly around the center point at a certain distance clockwise, and shoot the target directly below the center point, so as to collect the images of the mission location from all directions.

Important

- Orbit can be used with the stitch function for modeling of the target at the mission location.

■ Stitch

Stitch enables real-time modeling with photos taken by the aircraft during flight.
During the flight, the photos taken by the aircraft will be sent to remote controller through the Video Transmission link, and then pushed by the remote controller to the computer device with Autel Mapper client for map modeling. After the modeling is completed, the relevant map model will be displayed synchronously on the map interface of the remote controller, ensuring that the latest 2D map model of the photographed location is obtained in real time during the flight.
To enable the stitch function, you need to perform the following configurations in advance:

1. Connect the remote controller and the computer device with Autel Mapper Client to the same Wi-Fi; or turn on the WLAN hotspot function of the remote controller, and then connect the computer device with Autel Mapper client to the WLAN hotspot of the remote controller.
2. Enable the stitch function in the flight application, and enter the IP address of the computer device in the pop-up window. After the computer device is added successfully, the connection between the remote controller and the Autel Mapper client is completed.
3. When the connection is completed, the Autel Mapper client will pop up a window prompting you to create a project. Please follow the prompts to complete the creation.
4. Select "Polygon" or "Orbit" on the remote controller, and when the mission is executed, Autel Mapper will complete 2D modeling based on the photos and synchronize it to the remote controller, making the updated map model display on the map interface.

Important

- To ensure the modeling speed, please ensure that the computer device meets the hardware requirements of Autel Mapper client, and the computer device should be equipped with NVIDIA graphics card with computing power 6.0 and above.
- Please ensure a normal connection between the remote controller and the computer device to avoid abnormal interruption of the stitch function.

■ Cloud Service

The cloud service provides a configuration entry for connecting the drone and remote controller to a cloud service platform (such as Autel Integrated Command System or a third-party cloud service platform), thereby enabling the remote control and viewing of the drone.

6.9.7 Mission Library

Tap the “” icon in the toolbar or Menu to enter the "Mission" interface where you can manage the previously saved flight missions and perform operations such as querying, editing, favoriting, deleting and exporting.

1. Tap the “” icon or the “” icon on the top of the interface to query and locate the history mission that you are interested in.
2. Tap a saved flight mission on the “Mission” interface to enter the mission editing interface. Tap the “” icon to re-edit the flight mission.
3. Tap the “” icon at the upper right corner of the interface, and select one, or several or all missions to be favorited, and then tap the “” icon to complete the favoriting action. Favorited missions will be displayed on the "Favorites" interface for easy access.
4. Tap the “” icon at the upper right corner of the interface, and select one, or several or all missions to be deleted, then tap the “” icon, and tap “Confirm” button to delete the mission(s) selected.
5. Tap the “” icon at the upper right corner of the interface, and select one, or several or all missions to be exported, then tap the “” icon and tap “Confirm” button to export the mission(s) selected into the storage directory selected.

6.9.8 Personal Center

Tap the “” icon (in the toolbar or “Menu”) to enter the "Personal Center" interface.
When using the product for the first time, you need to register and log in to Autel Robotics cloud service account.
On the “Personal Center” interface, you can perform the following operations:

1. Query the flight time, flight distance, and the number of flights.
2. Purchase value-added service for your aircraft (within 48 hours after activation).

Tips

- If you do not register and log in to the cloud service account, you cannot use cloud-related functions.
- You have the right to use a registered account, but the account ownership belongs to Autel Robotics. Please read the "User Agreement" carefully when registering.

Chapter 7 Firmware Updates & Maintenance

In order to ensure the overall reliability and the safety of the UAS system, so as to provide the best flight experience for users, the UAS components need to be upgraded to the latest firmware version and maintained as required on regular basis.
Users can use the flight application to perform firmware updates for the drone, the remote controller, the smart battery, the gimbal, the flight application and other parts.

Important

- Online updates require that the remote controller can access the internet.

7.1 UAS Components Updates

1. Power on the remote controller and drone. Make sure that the drone and remote controller are already matched, both have a battery level of more than 25%, and the network connection of the remote controller is normal.
2. Open the flight application. If there is a version upgrade available, you will receive a pop-up notification on the main interface of the App or you can manually select the upgrade in the settings of the App.
3. Tap "Update All", and the flight application will automatically download upgrade package and conduct version update for the drone, the remote controller, the smart battery, the gimbal, and the flight application.
4. After the update is completed, follow the pop-up instructions to restart the remote controller and the drone.

Important

- During the update process, do not power off the drone and keep it connected to the remote controller.
- The update process is expected to take about 15 minutes (depending on the network that the remote controller is connected to).
- Do not move the sticks before and after the update to ensure that the propellers of the drone remain stationary.
- Make sure that the drone has a microSD card inserted and that the drone and remote controller have sufficient storage space for the firmware update packages.

7.2 Drone Parts Maintenance

To ensure the optimal performance of the drone, regular maintenance is required for the drone parts. For more information, see “Maintenance Manual”. If you have any questions, please contact Autel Robotics After-Sales Support.

Table 7-1 Drone Consumable Parts List

No.	Part	Quantity	Note
1	Propeller 1158CW	2	

2	Propeller 1158CCW	2	Each power motor uses 2 1158CW or 1158CCW propellers.
3	Powered Motor	4	Replacement only during deep maintenance (every 900 service hours/every 3 years).
4	Front Arm Leg	2	
5	Rear Arm Leg	2	
6	Arm Connector Cover	4	
7	Battery Unlock Button	2	
8	Air Inlet Dust Filter	1	
9	Air Outlet Dust Filter	1	
10	Remote Controller Sticks	2	

Table 7-2 User-replaceable Parts List

No.	Part	Quantity	Part Number	Manufacturer
1	Propeller 1158CW	2	EAN: 6924991133506 UPC: 889520213509	Autel Robotics
2	Propeller 1158CCW	2		
3	Fusion 4T V2 gimbal*	1	EAN: 6924991129677 UPC: 889520209670	Autel Robotics
4	Fusion 4N V2 gimbal*	1	EAN: 6924991124238 UPC: 889520204231	Autel Robotics
5	Fusion 4NZ-L V2 gimbal*	1	/	Autel Robotics
6	ABX41-D Smart Battery	1	EAN: 6924991136408 UPC: 889520216401	Autel Robotics

Tips

- You can independently contact Autel Robotics to purchase the aforementioned parts and follow the operation instructions for replacement.
- If the part that you want to replace is not listed in the above lists, please contact Autel Robotics. Failures caused by unauthorized disassembly and reassembly will not be covered by the warranty.
- For the service life of each part, see "Maintenance Manual".

7.3 Troubleshooting Guide

Tips

- The following troubleshooting measures are only limited to failures resulting from normal usage.
- For failures resulting from abnormal usage, please contact Autel Robotics for handling.

1. The remote controller cannot power on:
   a) Check whether the remote controller has sufficient power. If the battery level is too low, it may result in a power-on failure after shutdown. In this case, fully charge the remote controller and then power it on.
   b) Check whether the ambient temperature is suitable, as low temperatures can affect battery output performance, resulting in a power-on failure.
   c) If the remote controller was accidentally powered off during an update, it may not power on normally. In this case, contact Autel Robotics.
   d) If the remote controller has not been subjected to external impacts, liquid submersion, or other destructive behaviors and does not have any conditions mentioned above, it may have a hardware failure. In such cases, contact Autel Robotics.

2. The drone cannot power on:
   a) Check whether the smart battery has sufficient power. If the battery level is too low, it may result in a power-on failure after shutdown. In this case, fully charge the smart battery and then power the drone on.
   b) If the smart battery has sufficient power, check whether the battery makes proper contact with the drone's fuselage. Dirt or rust at the battery connector can lead to poor contact and must be cleaned before being re-inserted into the battery for power-on.
   c) Check whether there are any missing or damaged metal contacts at the drone battery connector and the smart battery connector. If yes, please contact Autel Robotics.
   d) Check whether the ambient temperature is suitable, as low temperatures can affect battery output performance, resulting in a power-on failure.
   e) If the drone or the smart battery is unexpectedly powered off during a firmware update, it may result in a power-on failure. In this case, contact Autel Robotics.
   f) When none of the above conditions apply, if the drone can power on after the smart battery is replaced, it may be a hardware failure of the smart battery; if the drone still cannot power on after the smart battery is replaced, it may be a hardware failure of the drone itself. In this case, contact Autel Robotics.

3. The drone reports a fault during startup self-check:
   a) Check the gimbal. If the gimbal has no response, power off the drone, reassemble the gimbal, and then perform a startup self-check again.
   b) If the gimbal successfully passes the self-check, but the drone still reports a fault, it may be a hardware failure of the drone. In this case, contact Autel Robotics.

4. There is no response from the remote controller when matching it with the drone:
   a) Confirm that the distance between the drone and the remote controller is within 1 meter.
   b) Check whether there is a metal object, mobile device, signal interference device, or another remote controller nearby.

5. In A-Mesh Link mode, the drone cannot trigger matching operation:
   a) If Single Link can be conducted, the firmware version of the smart battery is too early, which needs to be upgraded to V0.4.33.1 or later.
   b) If Single Link cannot be conducted, please contact Autel Robotics.
   c) Early Version Smart Battery Firmware Upgrade Method: Insert the battery into the drone and turn it on, after connecting the RC through Single Link, reboot the drone and the RC and upgrade them by following instructions in the interface.

6. After the drone powers on, the motors do not start:
   a) Check whether the remote controller is matched with the drone in frequency.
   b) Check whether the command sticks of the remote controller are functioning correctly and whether the remote controller has been correctly calibrated.
   c) Check whether the drone's battery has sufficient power.
   d) Check whether the drone's compass has been correctly calibrated.
   e) If none of the above conditions apply, it may be a hardware failure of the drone itself. In this case, contact Autel Robotics.

7. After the motors start, the drone does not take off:
   a) Check whether the drone is in a No-Fly Zone.
   b) Check whether the drone is placed on a flat surface.
   c) Check whether there are obstacles near the drone and whether the obstacle avoidance system of the drone is enabled.

8. The drone has shortened flight time:
   a) During flight, factors such as low ambient temperatures, flying against the wind, air turbulence, and carrying a mount all may lead to a shortened operating time of the drone.
   b) Make sure that the smart battery has fewer than 200 cycles. During the normal use of the smart battery, the battery capacity naturally decreases over time.

9. The remote controller has unstable Video Transmission (e.g., image lag, image loss, or frequent disconnection):
   a) Check whether the remote controller's antennas are securely connected and whether they are adjusted to an appropriate direction.
   b) Check whether there is any strong magnetic field or signal interference source near the drone and remote controller.
   c) Confirm that the distance between the drone and the remote controller falls within the effective communication range and promptly reduce the flight radius if needed.

10. The gimbal camera automatically turns off during recording:
   a) Do not immediately remove the microSD card from the drone. Instead, restart the camera and wait for the video file to be stored as much as possible.
   b) Check whether the memory of the microSD card is full; if it is, replace it with a new microSD card or transfer the media files.
   c) Check whether the gimbal is securely connected to the drone. If the gimbal is not securely locked during installation, it may become loose due to flight vibrations, leading to poor contact and thus malfunctions.

11. When the drone is flying beyond the visual line of sight, Video Transmission fails:
    a) Enable auto-return to let the drone return to the home point.

12. What precautions should I follow when using the omnidirectional visual obstacle avoidance sensing system?
    a) Before flying, make sure that the visual obstacle avoidance camera lens is clean and not blocked (“Omnidirectional” means that the system can sense objects in six directions, including front, rear, left, right, up, and down).
    b) When flying, pay attention to the surrounding environment and safety prompt messages of the flight application.
    c) Obstacles can be detected by checking the texture of their surfaces. The detection function cannot work properly for objects with no texture, repeated texture, a surface of pure color, moving objects, or tiny objects. It also cannot work properly in a strong light or weak light environment.

13. The accurate landing/landing protection function cannot work properly:
    a) The accurate landing function can be implemented by the visual obstacle avoidance sensing lens group on the rear of the drone. The camera detects the ground texture when the drone takes off or lands.
    b) However, if the ground does not have any texture or the visual sensing lens on the rear of the drone is damaged, this function cannot work properly.

14. The omnidirectional visual obstacle avoidance sensing system cannot work properly:
    a) Restart the drone and check whether the system can work properly this time.
    b) Check whether the ambient light illuminance is suitable for the operation of the visual obstacle avoidance sensing system.

15. When recording video during flight, the image tilts:
    a) Place the drone horizontally and keep it stationary. Use the "Gimbal Calibration" function in the flight application to calibrate the gimbal.
    b) If the problem persists, adjust the gimbal according to the instructions described in the “Gimbal Adjustment” section.

16. The camera lens of the drone is dirty:
    a) Gently wipe the lens with a lens cleaning soft cloth. It is recommended to use the lens cleaning cloth provided in the rugged case.

17. The drone or remote controller experiences unexpected shutdown during firmware updates:
    a) Restart the device. If it can power on normally, make sure that the device is sufficiently charged before proceeding with the update.
    b) If the device cannot power on, contact Autel Robotics.

18. Restore the factory setting of the remote controller:
    a) Tap the "Maxitools" app on the main interface of the remote controller to perform a factory reset. Please back up important data before performing this operation.

19. Forcefully restart the remote controller after lag:
    a) Press and hold the power button on the top of the remote controller for more than 6 seconds to forcefully power off the remote controller.
    b) Restarting the remote controller during flight will trigger the lost action of the drone.

Appendix A Product Specifications

A.1 Drone

Drone	
EVO Max 4T V2 Weight	1665 g (ABX41–D smart battery, Fusion 4T V2 gimbal, and propellers included)
EVO Max 4N V2 Weight	1700 g (ABX41–D smart battery, Fusion 4N V2 gimbal, and propellers included)
EVO Max 4NZ V2 Weight	1715 g (ABX41–D smart battery, Fusion 4NZ-L V2 gimbal, and propellers included)
Maximum Take-Off Mass	1999 g 1890 g (for C2 Certification in EU)
Fuselage Dimensions	563×657×147 mm (unfolded, incl. propellers)
Diagonal Wheelbase	Diagonal: 467 mm
Propeller Size	11 inch, 1158
Propeller Pitch	5.8 inch
Propeller Material	Nylon + Carbon Fiber
Propeller Weight	10.3 g
Maximum Propeller Rotational Speed	7500 RPM
Operating Temperature	-20℃ to +50℃ (without load) -20℃ to +40℃ (full load)
Internal Storage	128GB internal storage, with 64GB of available space* ** Remaining available space will vary with different firmware versions.*
Supported microSD Cards	Supports Class 10, UHS-3 or higher microSD cards, up to 1TB
GNSS	GPS + Galileo + BDS + GLONASS
Hot Swap Battery	Supported* ** The hot swap battery function must be enabled in the flight application in advance.*
Strobe	Integrated

Flight Performance	
Max Ascent Speed	**Slow:** 2.5 m/s **Smooth:** 3 m/s **Standard:** 6 m/s **Ludicrous:** 8 m/s
Max Descent Speed	**Slow:** 2.5 m/s **Smooth:** 3 m/s **Standard:** 6 m/s **Ludicrous:** 6 m/s
Max Flight Speed*	**Slow:** 3 m/s **Smooth:** 10 m/s **Standard:** 15 m/s (forward & backward), 10 m/s (sidewards) **Ludicrous:** 23 m/s (forward), 18 m/s (backward), 20 m/s (sidewards) ** Windless Near Sea Level.*
Max Service Ceiling Above Sea Level	4500 meters (use ABX41-D smart battery)
Max Flight Altitude*	**Chinese Mainland or EU Laws:** No more than 120 meters **US Law:** No more than 400 feet ** The altitude can be set from 20 to 800 meters in the flight application. To set altitude higher than required by law, authority approval is required.*
Max Flight Time*	42 minutes ** Test data from lab with windless environment in the speed of 8 m/s during horizonal flight and only for reference.*
Max Flight Distance*	25 km ** Test data from lab with windless environment in the speed of 14 m/s during horizonal flight and only for reference.*
Max Hover Time*	37 minutes * Test data from lab with windless environment during hovering and only for reference.
Max Wind Speed Resistance	12 m/s
Max Pitch Angle	**Slow:** 10° **Smooth:** 30° **Standard:** 30° **Ludicrous:** 36°
Max Angular Velocity	**Pitch axis:** 300°/s **Yaw axis:** 120°/s

Hovering Accuracy	Vertically ±0.1 m (when visual positioning works normally) ±0.5 m (when GNSS works normally) Horizontally ±0.3 m (when visual positioning works normally) ±0.5 m (when high-precision positioning system works normally)
Wi-Fi	
Protocol	802.11a/b/g/n/ac/ax
Operating Frequency	**2.4G:** 2.400–2.476GHz*，2.400–2.4835GHz **5.2G:** 5.15-5.25GHz**，5.17-5.25GHz*** **5.8G:** 5.725-5.829GHz*，5.725-5.850GHz ** Only applies to SRRC regions* *** Only applies to FCC, CE (Germany excluded) and UKCA regions* **** Only applies to Germany* *Note: Some frequencies are only available in some regions or for indoor use only. For details, please refer to local laws and regulations.*
Equivalent Isotropic Radiated Power (EIRP)	**2.4G:** ≤30dBm (FCC/ISED); ≤20dBm (CE/SRRC/UKCA) **5.2G:** ≤30dBm (FCC); ≤23dBm (CE/UKCA) **5.8G:** ≤30dBm (FCC/ISED/SRRC); ≤14dBm (CE/UKCA)
Video Transmission	
Operating Frequency	**900M:** 902-928MHz* **2.4G:** 2.400–2.476GHz**，2.400–2.4835GHz **5.2G:** 5.15-5.25GHz***, 5.17-5.25GHz**** **5.8G:** 5.725-5.829GHz**，5.725-5.850GHz ** Only applicable to FCC and ISED regions.* *** Only applicable to SRRC regions.* **** Only applicable to FCC, CE (Germany excluded) and UKCA regions* ***** Only applies to Germany* *Note: Some frequencies are only available in some regions or for indoor use only. For details, please refer to local laws and regulations.*
Equivalent Isotropic Radiated Power (EIRP)	**900M:** ≤30dBm (FCC/ISED) **2.4G:** ≤30dBm (FCC/ISED); ≤20dBm (CE/SRRC/UKCA) **5.2G:** ≤30dBm (FCC); ≤23 dBm (CE/UKCA) **5.8G:** ≤30dBm(FCC/ISED/SRRC); ≤14dBm(CE/UKCA)

Max Transmission Distance*	FCC: 15km SRRC/CE: 8km ** Without Interference and Blocking.*
Visual Obstacle Avoidance Sensing System	
Obstacle Sensing Range	**Forward:** 0.5 ~ 30 m **Backward:** 0.5 ~ 25 m **Sidewards:** 0.5 ~ 40 m **Upward:** 0.5 ~ 40 m **Downward:** 0.5 - 35 m
FOV	**Forward & Backward:** 60°(H), 80°(V) **Upward:** 180° (sidewards), 120° (forward & backward) **Downward:** 180° (sidewards), 120° (forward & backward)
Operating Environment	**Forward, backward, sidewards, and upward:** The surface has rich textures, under a sufficient lighting environment (>15 lux, normal indoor fluorescent lighting environment). **Downwards:** The surface has rich textures, and the surface is a diffuse material with a reflectivity >20% (walls, trees, humans, etc.), under a sufficient lighting environment (>15 lux, normal indoor fluorescent lighting environment).
Millimeter-Wave Radar Sensing System	
Transmission Frequency	**24G:** 24.0 - 24.25 GHz **60G:** 60 - 64 GHz
Equivalent Isotropic Radiated Power (EIRP)	**60G:** ≤20dBm (CE/UKCA/FCC) **24G:** ≤20dBm (CE/UKCA/FCC), ≤13dBm (SRRC)
Sensing Range	**60G millimeter-wave radar:** Upward: 0.3 ~ 18 m @ high voltage transmission line Downward: 0.15 ~ 40 m @ concrete floor Forward & Backward: 0.15 ~ 18 m @ high voltage transmission line, with flight speed 10 m/s Sidewards: 0.15 ~ 18 m @ high voltage transmission line, with flight speed 10 m/s **24G millimeter-wave radar:** Downward: 0.8 ~ 12 m @ concrete floor
FOV	**Horizontal (6dB):** ±30°/±15° (60G/24G) **Vertical (6dB):** ±40°/±15° (60GHz/24G)
Operating Environment	**60G millimeter-wave radar sensing system:**

	Supports all-weather obstacle avoidance for glass, water, transmission line, buildings, and trees in 6 directions. Its obstacle avoidance distance varies with the obstacle's ability to reflect electromagnetic waves and its surface size. **24G millimeter-wave radar sensing system:** Supports downward sensing, and its sensing range varies by the ground material. For example, the sensing range of cement ground is 12 meters, and the sensing range of grass with a thickness of more than 3 cm is less than 6 meters.

A.2 Gimbal

A.2.1 Fusion 4T V2

Fusion 4T V2	
Gimbal Weight	214 g
Mechanical Range	**Tile:** -135° to 45° **Roll:** -50° to 50° **Pan:** -45° to 45°
Controllable Range	**Tilt:** -90° to 30°
Stabilization System	3-axis mechanical gimbal (tilt, roll, pan)
Max Control Speed	**Tilt:** 100°/s
Angular Vibration Range	<0.005°
Zoom Camera	
Image Sensor	1/2" CMOS. Effective pixels: 48M
Lens	**DFOV:** 40°-10.3° **Equivalent Focal Length:** 64 - 234 mm **Aperture:** f/2.8 – f/4.8 **Focus:** 2 m ~ ∞
ISO Range	**Auto:** ISO100 ~ ISO6400 **Manual:** ISO100 ~ ISO6400
Shutter Speed	**Shooting:** 8s ~ 1/10000s **Recording:** 1/30s ~ 1/10000s
Zoom	2.7 - 10x continuous optical zoom, 20x hybrid zoom and 160x digital zoom
Photo Size	**JPG:** 4000×3000, 8000×6000

	DNG: 4000×3000
Still Photography Mode	Single
Video Resolution	4000×3000@30fps
Max Video Bitrate	60Mbps
Video Format	MP4
Video Subtitles	Supported
Video Encoding	H.264/H.265
Supported File System	exFAT/FAT32
Wide-angle camera	
Image Sensor	1/2" CMOS. Effective pixels: 48M
Lens	**DFOV:** 83.4° **Equivalent focal length:** 24 mm **Aperture:** f/2.8 **Focus:** 1.5 m ~ ∞
ISO Range	**Auto/Manual:** ISO100 ~ ISO6400 **Night Mode:** ISO100 ~ ISO320000 (auto)
Shutter Speed	**Shooting:** 8s ~ 1/10000s **Recording:** 1/30s ~ 1/10000s
Zoom	1 – 2.6x digital zoom
Photo Size	**JPG:** 4000×3000, 8000×6000 **DNG:** 4000×3000
Still Photography Mode	Single
Video Resolution	4000×3000@30fps **Night Mode:** 2400×1800@30fps
Max Video Bitrate	60Mbps
Video Format	MP4
Video Subtitles	Supported
Video Encoding	H.264/H.265
Supported File System	exFAT/FAT32
Infrared Thermal Camera	

Thermal Imager	Uncooled VOx Microbolometer
Lens	**FOV:** 61° **Focal length:** 9.1 mm **Aperture:** f/1.0 **Focusing distance:** 2.2 m ~ ∞
Equivalent Digital Zoom Rate	1-16x digital zoom
Noise Equivalent Temperature Difference	≤50mK@25℃, F#1.0
Pixel Pitch	12 um
Spectral Band	8 – 14 um
Temperature Measurement Method	Center Point Temperature Measurement/Spot Temperature Measurement/Area Temperature Measurement
Temperature Measurement Range	**High Gain Mode:** -20℃ to 150℃ **Low Gain Mode:** 0 to 550℃
Temperature Measurement Accuracy	±2℃ or reading ±2% (using the larger value) @ ambient temperature ranges from -10℃ to 50℃
Temperature Measurement Distance	1-100 m
Temperature Alert	In area temperature measurement, high and low temperature alarm thresholds, reporting coordinates and temperature values are supported
Palette	White Hot/Black Hot/Ironbow/Rainbow 1/Rainbow 2/Lava/Arctic/Ironbow/Medical/Tint
Photo Size	640×512
Still Photography Mode	Single
Photo Format*	JPG ** the images contain temperature information and are parsed by dedicated SDK and PC tools.*
Video Resolution	640×512@30fps
Max Video Bitrate	10Mbps
Video Format	MP4
Supported File System	exFAT/FAT32

Laser Rangefinder	
Wavelength	905 nm
Laser Safety	Class 1
Measuring Accuracy	± (1 m + D*×0.15%) ** Where D is the distance to a vertical reflecting plane.*
Measurement Range	5 - 1200 m

A.2.2 Fusion 4N V2

Fusion 4N V2	
Gimbal Weight	258 g
Mechanical Range	**Tile:** -135° to 55° **Roll:** -50° to 50° **Pan:** -45° to 45°
Controllable Range	**Tilt:** -90° to 30°
Stabilization System	3-axis mechanical gimbal (tilt, roll, pan)
Max Control Speed	**Tilt:** 100°/s
Angular Vibration Range	<0.005°
Night Vision Camera	
Image Sensor	1.69" CMOS. Effective pixels: 2.3M
Lens	**DFOV:** 52°±2° **Effective Focal Length:** 11.2 mm **Aperture:** f/1.4 **Focus:** 10 m ~ ∞
Pixel Pitch	12 um
ISO Range	**Auto/Manual:** ISO100 ~ ISO440000 **Night Mode:** ISO100 ~ ISO440000 (auto)
Shutter Speed	**Shooting:** 8s ~ 1/10000s **Recording:** 1/30s ~ 1/10000s
Zoom	1 ~ 8x digital zoom
Photo Size	JPG: 1920×1200

Still Photography Mode	Single
Video Resolution	1920×1200@30fps
Max Video Bitrate	20Mbps
Video Format	MP4
Video Subtitles	Supported
Video Encoding	H.264/H.265
Supported File System	exFAT/FAT32
Wide-angle camera	
Image Sensor	1/0.98" CMOS. Effective pixels: 50M
Lens	**DFOV:** 85.01° **Equivalent focal length:** 23.52 mm **Aperture:** f/1.85 **Focus:** 0.5 m ~ ∞
ISO Range	**Auto/Manual:** ISO100 ~ ISO6400 **Night Mode:** ISO100 ~ ISO320000 (auto)
Shutter Speed	**Shooting:** 8s ~ 1/10000s **Recording:** 1/30s ~ 1/10000s
Zoom	1 ~ 8x digital zoom
Photo Size	JPG: 4096×3072, 8192×6144
Still Photography Mode	Single
Video Resolution	4000×3000@30fps
Max Video Bitrate	60Mbps
Video Format	MP4
Video Subtitles	Supported
Video Encoding	H.264/H.265
Supported File System	exFAT/FAT32
Infrared Thermal Camera	
Thermal Imager	Uncooled VOx Microbolometer
Lens	**FOV:** 61°

	Focal length: 9.1 mm **Aperture:** f/1.0 **Focusing distance:** 2.2 m ~ ∞
Equivalent Digital Zoom Rate	1-16x digital zoom
Noise Equivalent Temperature Difference	≤50mK@25℃, F#1.0
Pixel Pitch	12 um
Spectral Band	8 – 14 um
Temperature Measurement Method	Center Point Temperature Measurement/Spot Temperature Measurement/Area Temperature Measurement
Temperature Measurement Range	**High Gain Mode:** -20℃ to 150℃ **Low Gain Mode:** 0 to 550℃
Temperature Measurement Accuracy	±2℃ or reading ±2% (using the larger value) @ ambient temperature ranges from -10℃ to 50℃
Temperature Measurement Distance	1 - 100 m
Temperature Alert	In area temperature measurement, high and low temperature alarm thresholds, reporting coordinates and temperature values are supported
Palette	White Hot/Black Hot/Ironbow/Rainbow 1/Rainbow 2/Lava/Arctic/Ironbow/Medical/Tint
Photo Size	640×512
Still Photography Mode	Single
Photo Format*	JPG ** the images contain temperature information and are parsed by dedicated SDK and PC tools.*
Video Resolution	640×512@30fps
Max Video Bitrate	10Mbps
Video Format	MP4
Supported File System	exFAT/FAT32
Laser Rangefinder	

Wavelength	905 nm
Laser Safety	Class 1
Measuring Accuracy	± (1 m + D*×0.15%) ** Where D is the distance to a vertical reflecting plane.*
Measurement Range	5 - 1200 m

A.2.3 Fusion 4NZ-L V2

Fusion 4NZ-L V2	
Gimbal Weight	263 g
Mechanical Range	**Tile:** -135° to 50° **Roll:** -50° to 50° **Pan:** -45° to 45°
Controllable Range	**Tilt:** -90° to 30°
Stabilization System	3-axis mechanical gimbal (tilt, roll, pan)
Max Control Speed	**Tilt:** 100°/s
Angular Vibration Range	<0.005°
Wide-angle Night Vision Camera	
Image Sensor	1/1.2" CMOS. Effective pixels: 8M
Lens	**DFOV:** 45° **Equivalent Focal Length:** 53.9 mm **Aperture:** f/1.55±5% **Focus:** 20 m ~ ∞
Pixel Pitch	2.9 um
ISO Range	**Auto/Manual:** ISO100 ~ ISO100000 **Night Mode:** ISO100 ~ ISO100000
Shutter Speed	**Shooting:** 1/30s ~ 1/10000s **Recording:** 1/30s ~ 1/10000s
Zoom	1 ~ 3.2x digital zoom
Photo Size	JPG: 3840×2160
Still Photography Mode	Single
Video Resolution	3840×2160@30fps

	Night Mode: 2720×1528@30fps
Max Video Bitrate	50Mbps
Video Format	MP4
Video Subtitles	Supported
Video Encoding	H.264/H.265
Supported File System	exFAT/FAT32
Telephoto Night Vision Camera	
Image Sensor	1/1.2" CMOS. Effective pixels: 8M
Lens	**DFOV:** 16.3° **Equivalent focal length:** 147.3 mm **Aperture:** f/1.75±5% **Focus:** 20 m ~ ∞
Pixel Pitch	2.9 um
ISO Range	**Auto/Manual:** ISO100 ~ ISO100000 **Night Mode:** ISO100 ~ ISO100000
Shutter Speed	**Shooting:** 1/30s ~ 1/10000s **Recording:** 1/30s ~ 1/10000s
Zoom	3.3 ~ 16x digital zoom
Photo Size	JPG: 3840×2160
Still Photography Mode	Single
Video Resolution	3840×2160@30fps **Night Mode:** 2720×1528@30fps
Max Video Bitrate	50Mbps
Video Format	MP4
Video Subtitles	Supported
Video Encoding	H.264/H.265
Supported File System	exFAT/FAT32
Infrared Thermal Camera	
Thermal Imager	Uncooled VOx Microbolometer

Lens	**FOV:** 22° **Focal Length:** 25 mm **Aperture:** f/1.2 **Focusing Distance:** 13 m ~ ∞
Equivalent Digital Zoom Rate	1-16x digital zoom
Noise Equivalent Temperature Difference	≤50mK@25℃, F#1.0
Pixel Pitch	12 um
Spectral Band	8 – 14 um
Temperature Measurement Method	Center Point Temperature Measurement/Spot Temperature Measurement/Area Temperature Measurement
Temperature Measurement Range	**High Gain Mode:** -20℃ to 150℃ **Low Gain Mode:** 0 to 550℃
Temperature Measurement Accuracy	±3℃ or reading ±3% (using the larger value) @ ambient temperature ranges from -10℃ to 50℃
Temperature Measurement Distance	1 – 100m
Temperature Alert	In area temperature measurement, high and low temperature alarm thresholds, reporting coordinates and temperature values are supported
Palette	White Hot/Black Hot/Ironbow/Rainbow 1/Rainbow 2/Lava/Arctic/Ironbow/Medical/Tint
Photo Size	640×512
Still Photography Mode	Single
Photo Format*	JPG ** the images contain temperature information and are parsed by dedicated SDK and PC tools.*
Video Resolution	640×512@30fps
Max Video Bitrate	10Mbps
Video Format	MP4
Supported File System	exFAT/FAT32
Laser Rangefinder	

Wavelength	905 nm
Laser Safety	Class 1
Measuring Accuracy	± (1 m + D*×0.15%) ** Where D is the distance to a vertical reflecting plane.*
Measurement Range	5 - 1200 m
Infrared laser fill light	
Laser Safety	Class 3B
FOV	Telephoto: 8°* ** The maximum fill light distance is 200 meters.* Wide-angle: 30°** *** The fill light effect is better at a distance of 50 meters.*

A.3 Remote Controller

Autel Smart Controller V3	
Body Material	PC+ABS
RC Dimensions	269×189×87 mm (antennas folded, sticks and bracket included) 269×189×173 mm (antennas vertical to screen, sticks and bracket included) 269×302×87 mm (antennas unfolded, sticks and bracket included)
RC Weight	1195 g (smart controller cover excluded) 1365 g (smart controller cover included)
Operating Temperature	-20℃ to 40℃
Storage Temperature	+15℃ ~ +25℃ (within a year) 0℃ ~ +30℃ (within three months) -20℃ ~ +45℃ (within a month)
Ingress Protection Rating	IP43* ** Long-term use may cause failure.*
System Performance	
Operating System	Based on Android 11
Pre-installed flight Application	Autel Enterprise

Application Installation	Supports the installation of third-party Android applications
Video Performance	Smooth playback of 4K@24fps H.264/H.265 videos
Internal Storage	128GB* ** Does not support microSD card extension.*
GNSS	GPS + Galileo + BDS + GLONASS
Port	
HDMI	Outputs up to 1080P@60fps video
USB-C	**Charging:** supports PD 60W fast charging and QC 18W fast charging. **Data:** USB3.1 Gen2
USB-A	**Power:** 5V/2A **Data:** USB2.0
Wi-Fi	
Protocol	802.11a/b/g/n/ac
Operating Frequency	**2.4G:** 2.400–2.476GHz*, 2.400–2.4835GHz **5.8G:** 5.725-5.829GHz*, 5.725-5.850GHz ** Only applies to SRRC region* *Note: Some frequencies are only available in some regions or for indoor use only. For details, please refer to local laws and regulations.*
Equivalent Isotropic Radiated Power (EIRP)	**2.4G:** ≤30dBm (FCC/ISED); ≤20dBm (CE/SRRC/UKCA) **5.8G:** ≤30dBm (FCC/ISED/SRRC); ≤14dBm (CE/UKCA)
Bluetooth	
Protocol	Bluetooth 5.0
Operating Frequency	2.400 - 2.4835 GHz *Note: In some regions, frequency range is specified. For details, please refer to local laws and regulations.*
Effective Isotropic Radiated Power (EIRP)	≤20dBm
Video Transmission	
Antenna	Dual antennas, 1T2R, detachable design
Operating Frequency	**900M:** 902-928MHz*

	2.4G: 2.400–2.476GHz**, 2.400–2.4835GHz **5.8G:** 5.725-5.829GHz**, 5.725-5.850GHz ** Only applicable to FCC and ISED regions.* *** Only applicable to SRRC region.* *Note: Some frequencies are only available in some regions or for indoor use only. For details, please refer to local laws and regulations.*
Effective Isotropic Radiated Power (EIRP)	**900M:** ≤30dBm（FCC/ISED） **2.4G:** ≤30dBm（FCC/ISED); ≤20dBm (CE/SRRC/UKCA) **5.8G:** ≤30dBm（FCC/ISED/SRRC); ≤14dBm (CE/UKCA)
Max Transmission Distance*	FCC: 15 km SRRC/CE: 8 km ** Without Interference and Blocking.*
Display	
Type	TFT LCD
Dimensions	7.9 inches
Resolution	2048×1536
Max Brightness	2000 nits
Refresh Rate	60Hz
Touch Control	Supported
Battery	
Battery Replacement	Built-in, not supported
Battery Type	Li-Po 3S
Rated Capacity	5800 mAh
Rated Energy	67 Wh
Voltage	11.55V
Charging Time	About 120 minutes* ** Charging time depends on the actual remaining power.*
Battery Endurance	**Max brightness:** 2.5 hours **50% brightness:** 4.0 hours

A.4 Smart Battery

ABX41-D Smart Battery	
Battery Weight	530 g
Battery Dimension	158.4×74.3×50.7 mm
Operating Temperature	-20℃ to 50℃
Storage Temperature	-20℃ to +35℃
Ideal Storage Environment	+22℃ to +28℃, 65±20%RH, 60% battery level
Battery Type	Li-Po 4S
Rated Capacity	9248mAh
Rated Energy	136.5Wh
Voltage	DC 14.76V
Charging Voltage Limit	DC 17.0V
Rated Charging Power	120W
Max Charging Power	282W
Battery Charge Temperature	+5℃ to +45℃* ** When the battery temperature is below +5 ℃, the battery stops charging and activates self-heating. When the battery temperature is above +45 ℃, the battery stops charging.*
Service life	200 discharge cycles* ** If the number of discharge cycles exceeds 200, the battery should be replaced with a new one.*
Battery Charger MDX120W	
Power Input	100-240V~ 50/60Hz, 3.0A
Output Port	Battery charging port/USB-C
Battery Charging port	17V⎓7.06A
USB-C	5.0V⎓3.0A, 9.0V⎓3.0A, 12.0V⎓2.5A
Total Power Output	120.0W Max